English Catalog 5.1

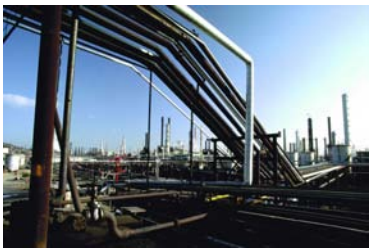

Electrical and Electronic Enclosures
Mild Steel, Stainless Steel and Aluminum

NS NONSTONE CO., LTD.

BUILDING TOMORROW, TODAY

All Enclosures with Rampf Gasket

High Quality Made In Taiwan

BUILDING TOMORROW, TODAY

Notes:

NONSTONE

BUILDING TOMORROW, TOGETHER

IP55 - IP66 ALL PROTECTION

ALUMINIUM, SUS304 and SUS316 ALL AVAILABLE

NONSTONE

CO Series Control Desk

WATER & DUST TIGHT

EQUIPMENTED WITH GAS SPRING FOR EASY LIFTING

SUS 304 & SUS 316 AVAILABLE

www.nonstone.com.tw

NONSTONE

Why choose Nonstone?

- **Nonstone offer complete lines of enclosures**

  Nonstone offers complete lines of modular, free standing and wall mount enclosures.

- **State-of-the-art FIPG technology**

  All enclosures feature German seamless foam-in-place gasket (FIPG) ensures every enclosure meet watertight and dust tight standards.

- **Nonstone work with customers**

  Right enclosures can improve efficient and speed. Nonstone work with customers modify and develop enclosures meet your special needs.

ISO 9001、IP66、IP65、CERTIFICATIES

REACH COMPLIANCE

INDEX

Page

ME Series	Modular Enclosures	3
CO Series	One-Piece Consoles	31
AL Series	Wall Mount Enclosures	33
NS Series	Wall Mount Enclosures	37
NSS Series	Stainless Steel Enclosures	41
NSW Series	IP65 Window Enclosures	45
ES Series	Wall Mount Enclosure with Gland Plate	49
ESS Series	Stainless Steel Enclosure with Gland Plate	53
FT Series	Wall Mount Enclosures	57
TB Series	Terminal Box	61
Accessories		64

INDEX

ME Series:
Modular Enclosures
P.3

CO Series:
One-Piece Consoles
P.31

AL Series:
Wall Mount Enclosures
P.33

NS Series:
Wall Mount Enclosures
P.37

NSDD Series:
Wall Mount Enclosures
P.40

NSS Series:
Stainless Steel Enclosures
P.41

NSW Series:
IP65 Window Enclosures
P.45

ES Series:
Wall Mount Enclosure with Gland Plate
P.49

ESDD Series:
Wall Mount Enclosure with Gland Plate
P.52

ESS Series:
Stainless Steel Enclosure with Gland Plate
P.53

TB Series:
Terminal Box
P.61

Accessories
P.64

NS Series Wall Mount Enclosures

IP66

QUALITY | INNOVATION

NONSTONE

MESS Stainless Steel

- SUS 304 & SUS 316 AVAILABLE
- HIGH RESISTANCE TO CORROSION

ME Series Modular Enclosures

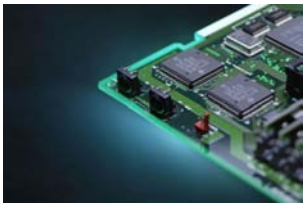

Food, petroleum chemical, electronics.

Industry and other related industries.

ME Series Modular Enclosures

IP55

Construction

- Solid covers, sides and tops use 1.5mm-2.0mm steel
- Doors are use 1.5mm-2.0mm steel
- Mounting plate use 2.0mm or 3.0mm galvanized steel
- High quality automatic seamless foam-in-place gasket
- Heavy-duty hinges
- Grounding studs on body and door
- Key Lock with Swing Handle

Finish

- RAL 7032 power coating, RAL 7035 and other color available
- Mounting plate in galvanized finish

Industry Standard

ME Series

- IP55, IEC 60529
- RoHS Compliant
- CE

Custom Enclosures

Nonstone offers high quality custom enclosures and modification services at competitive price. For information, please contact your NonStone representative.

- Other finish color and textures
- Cutouts and special holes in body and doors.
- Custom doors
- Custom body
- Special or custom accessories

ME Series Modular Enclosures

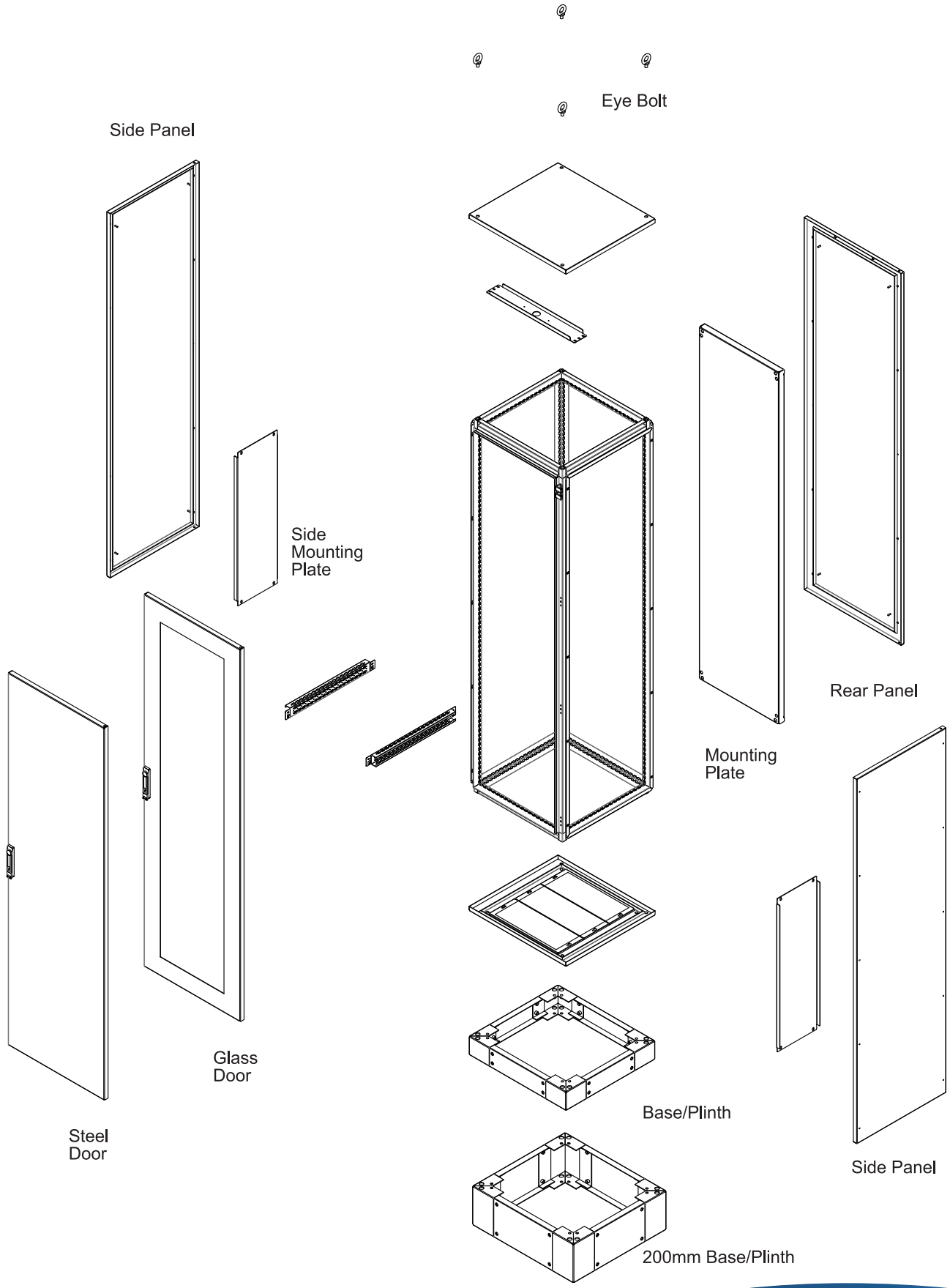

ME Frame

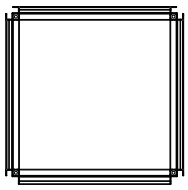

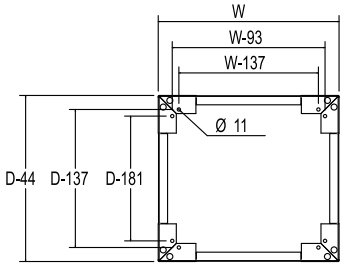

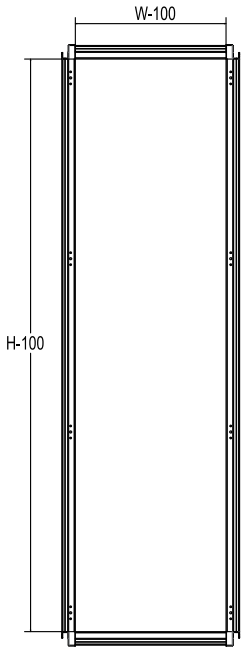

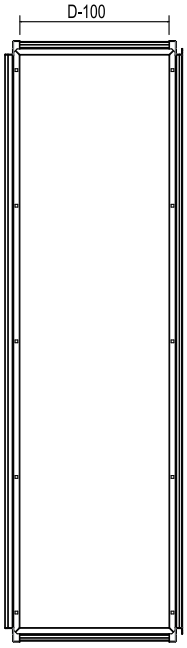

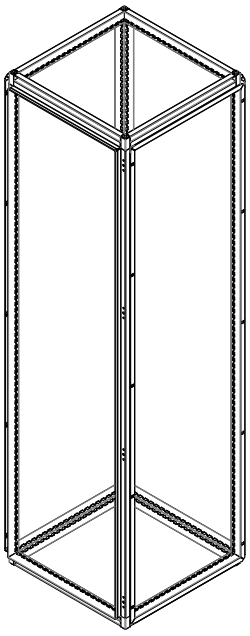

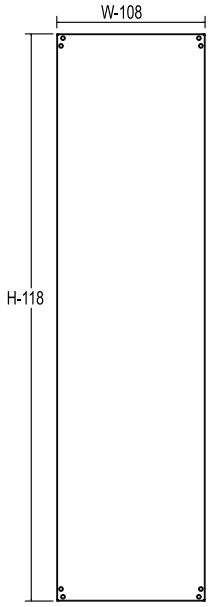

ME Modular Enclosure

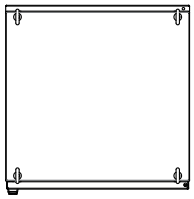

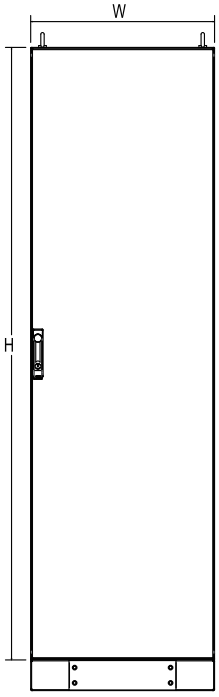

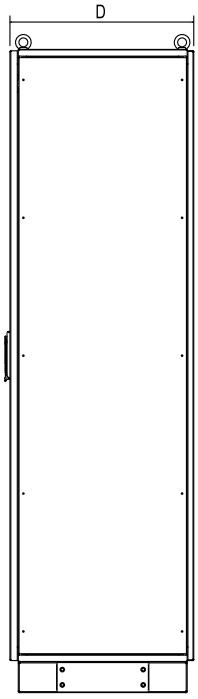

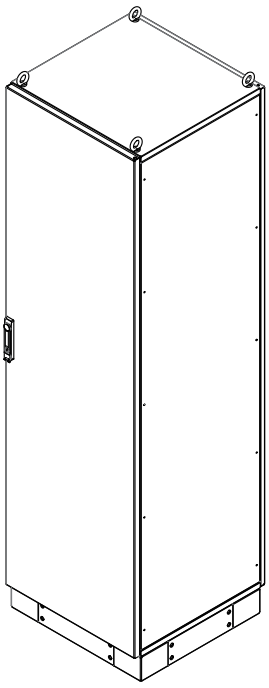

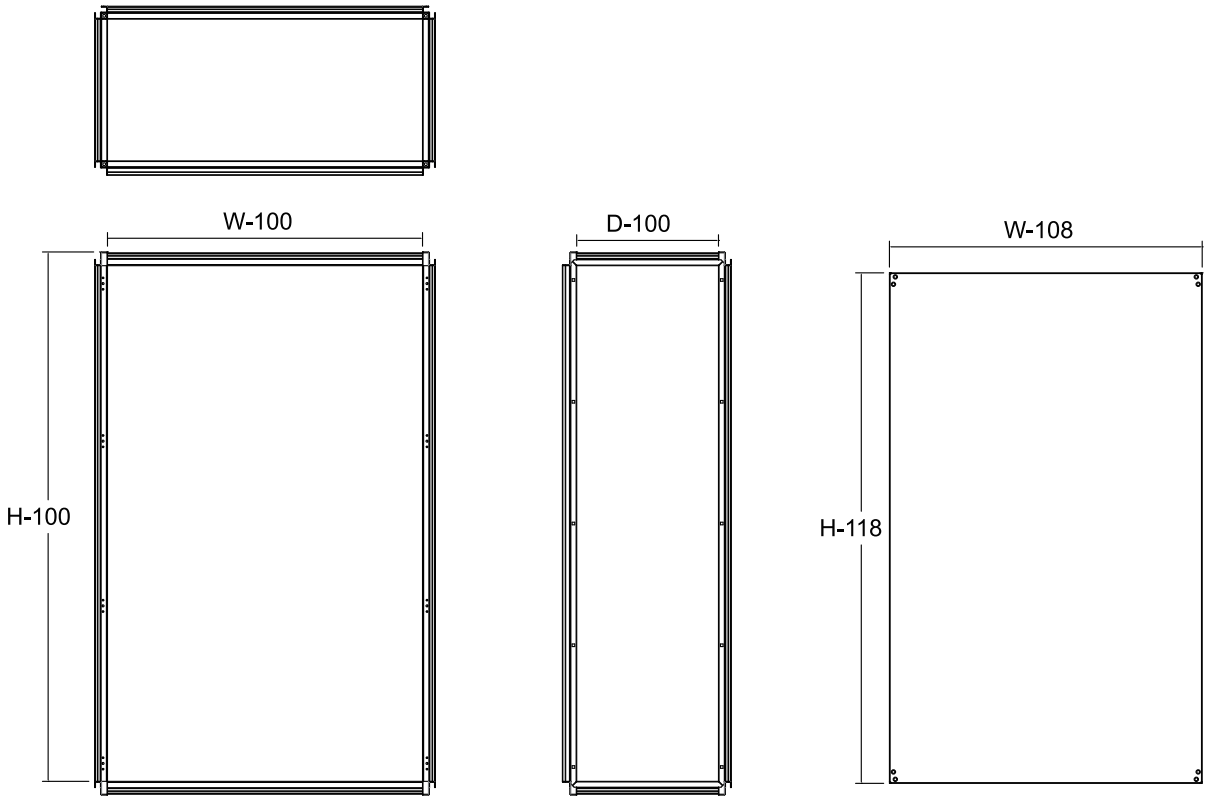

Double Bay Drawing

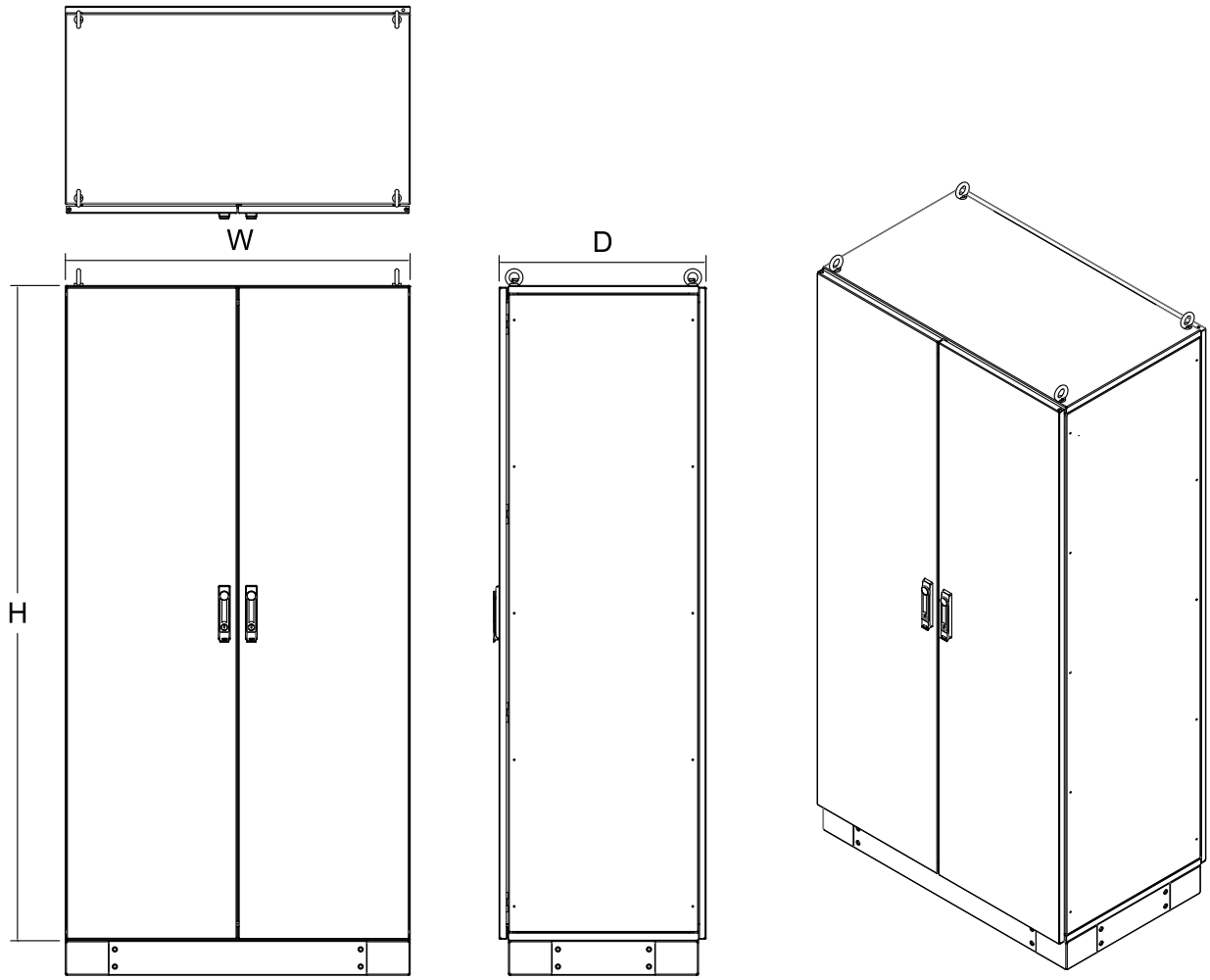

ME Series Modular Enclosures Package 1

Single Bay , IP55

With Top, Bottom Cover, Front and Rear Panel,
3pcs Gland Plate, Eye Bolt, Swing Handle

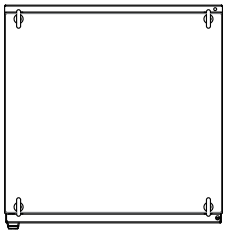

Construction

- Basic
- Rear Panel
- Front Door with Swing Handle
- Top Cover
- Eye Bolt (4pcs)
- Gland Plate in 3pcs
- Support Rail (2pcs)

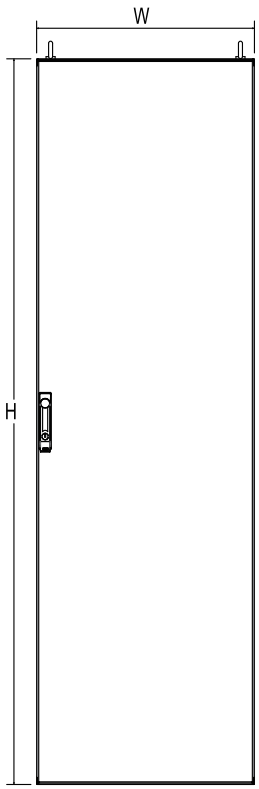

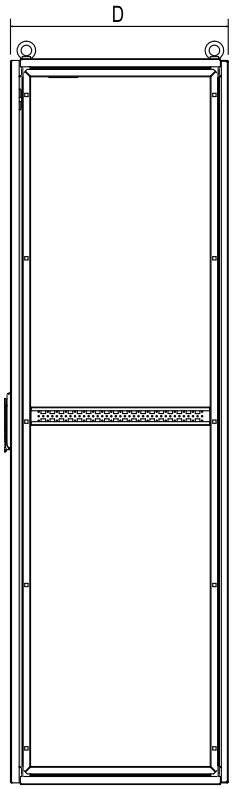

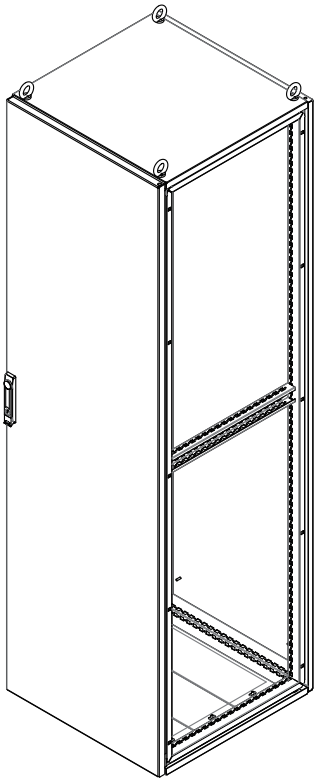

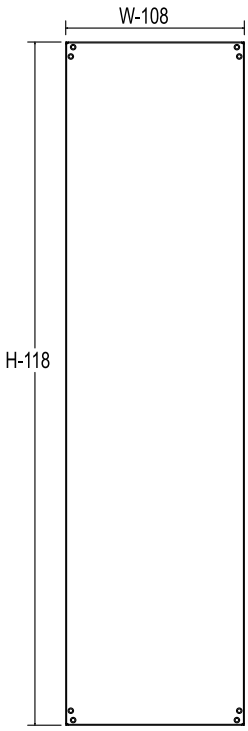

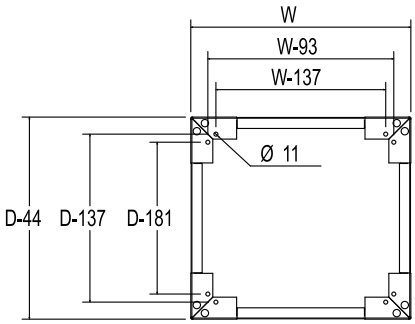

Single Bay, IP55

NO.	Catalog Number	Dimensions H(mm)	W(mm)	D(mm)	Side Panel	Base /Plinth	Mounting Plate
1	ME 1664	1600	600	400	SP 164	BS 6040	MP 166
2	ME 1665	1600	600	500	SP 165	BS 6050	MP 166
3	ME 1666	1600	600	600	SP 166	BS 6060	MP 166
4	ME 1668	1600	600	800	SP 168	BS 6080	MP 166
5	ME 1684	1600	800	400	SP 164	BS 8040	MP 168
6	ME 1685	1600	800	500	SP 165	BS 8050	MP 168
7	ME 1686	1600	800	600	SP 166	BS 8060	MP 168
8	ME 1688	1600	800	800	SP 168	BS 8080	MP 168
9	ME 16104	1600	1000	400	SP 164	BS 10040	MP 1610
10	ME 16105	1600	1000	500	SP 165	BS 10050	MP 1610
11	ME 16106	1600	1000	600	SP 166	BS 10060	MP 1610
12	ME 16108	1600	1000	800	SP 168	BS 10080	MP 1610
13	ME 1864	1800	600	400	SP 184	BS 6040	MP 186
14	ME 1865	1800	600	500	SP 185	BS 6050	MP 186
15	ME 1866	1800	600	600	SP 186	BS 6060	MP 186
16	ME 1868	1800	600	800	SP 188	BS 6080	MP 186
17	ME 1884	1800	800	400	SP 184	BS 8040	MP 188
18	ME 1885	1800	800	500	SP 185	BS 8050	MP 188
19	ME 1886	1800	800	600	SP 186	BS 8060	MP 188
20	ME 1888	1800	800	800	SP 188	BS 8080	MP 188
21	ME 18104	1800	1000	400	SP 184	BS 10040	MP 1810
22	ME 18105	1800	1000	500	SP 185	BS 10050	MP 1810
23	ME 18106	1800	1000	600	SP 186	BS 10060	MP 1810
24	ME 18108	1800	1000	800	SP 188	BS 10080	MP 1810
25	ME 2064	2000	600	400	SP 204	BS 6040	MP 206
26	ME 2065	2000	600	500	SP 205	BS 6050	MP 206
27	ME 2066	2000	600	600	SP 206	BS 6060	MP 206
28	ME 2068	2000	600	800	SP 208	BS 6080	MP 206
29	ME 2084	2000	800	400	SP 204	BS 8040	MP 208
30	ME 2085	2000	800	500	SP 205	BS 8050	MP 208
31	ME 2086	2000	800	600	SP 206	BS 8060	MP 208
32	ME 2088	2000	800	800	SP 208	BS 8080	MP 208
33	ME 20104	2000	1000	400	SP 204	BS 10040	MP 2010
34	ME 20105	2000	1000	500	SP 205	BS 10050	MP 2010
35	ME 20106	2000	1000	600	SP 206	BS 10060	MP 2010
36	ME 20108	2000	1000	800	SP 208	BS 10080	MP 2010
37	ME 2266	2200	600	600	SP 226	BS 6060	MP 226
38	ME 2268	2200	600	800	SP 228	BS 6080	MP 226
39	ME 2278	2200	700	800	SP 229	BS 7080	MP 227
40	ME 2279	2200	700	900	SP 226	BS 7090	MP 227
41	ME 2286	2200	800	600	SP 228	BS 8060	MP 228
42	ME 2288	2200	800	800	SP 228	BS 8080	MP 228
43	ME 22105	2200	1000	500	SP 225	BS 10050	MP 2210
44	ME 22106	2200	1000	600	SP 226	BS 10060	MP 2210
45	ME 22108	2200	1000	800	SP 228	BS 10080	MP 2210

Note:
1. Side Panel 2pcs/set
2. Galvanized Steel Mounting Plate

ME Series Modular Enclosures Package 1

Double Bay , IP55

With Top, Bottom Cover, Overlapping Steel Door and Rear Panel, 3pcs Gland Plate, Eye Bolt, Swing Handle

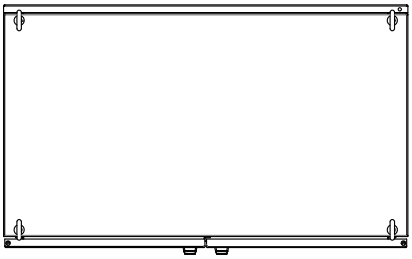

Construction

- Double Door
- Rear Panel
- Front Door with Swing Handle
- Top Cover
- Eye Bolt (4pcs)
- Gland Plate in 3pcs
- 2pcs Support Rail
- 2pcs Top Frame Support Rail

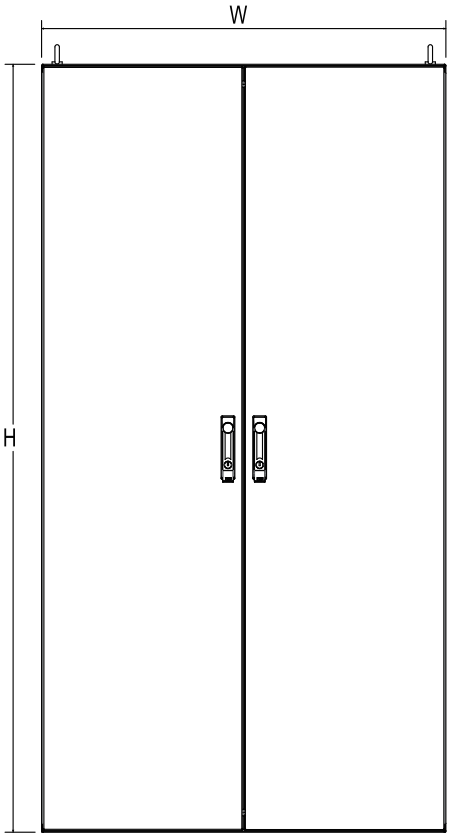

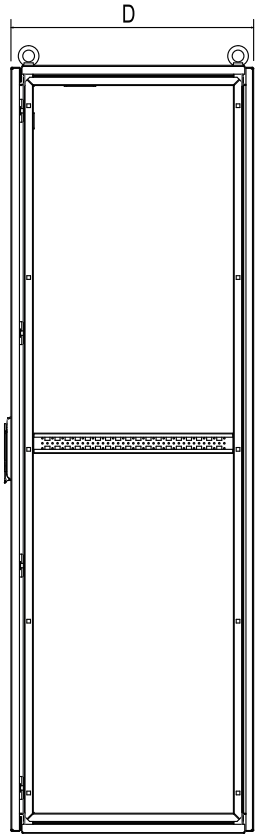

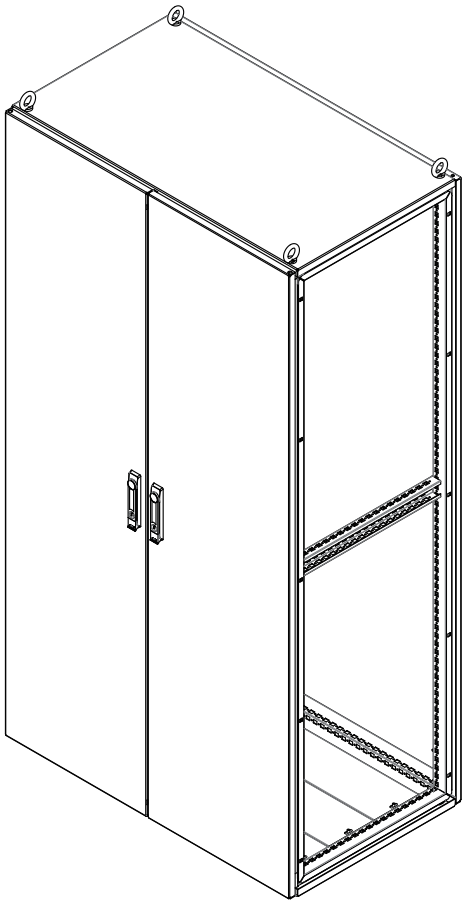

Double Bay, IP55

NO.	Catalog Number	Dimensions H(mm)	W(mm)	D(mm)	Side Panel	Base /Plinth	Mounting Plate
1	ME 7126	700	1200	600	SP 76	BS 12060	MP 712
2	ME 14124	1400	1200	400	SP 144	BS 12040	MP 1412
3	ME 14125	1400	1200	500	SP 145	BS 12050	MP 1412
4	ME 16124	1600	1200	400	SP 164	BS 12040	MP 1612
5	ME 16125	1600	1200	500	SP 165	BS 12050	MP 1612
6	ME 16126	1600	1200	600	SP 166	BS 12060	MP 1612
7	ME 16128	1600	1200	800	SP 168	BS 12080	MP 1612
8	ME 18124	1800	1200	400	SP 184	BS 12040	MP 1812
9	ME 18125	1800	1200	500	SP 185	BS 12050	MP 1812
10	ME 18126	1800	1200	600	SP 186	BS 12060	MP 1812
11	ME 18128	1800	1200	800	SP 188	BS 12080	MP 1812
12	ME 20124	2000	1200	400	SP 204	BS 12040	MP 2012
13	ME 20125	2000	1200	500	SP 205	BS 12050	MP 2012
14	ME 20126	2000	1200	600	SP 206	BS 12060	MP 2012
15	ME 20128	2000	1200	800	SP 208	BS 12080	MP 2012
16	ME 22126	2200	1200	600	SP 226	BS 12060	MP 2212
17	ME 22128	2200	1200	800	SP 228	BS 12080	MP 2212

Note:
1. Side Panel 2pcs/set
2. Galvanized Steel Mounting Plate

MEDA Series Modular Enclosures Package 2

Dual Access Singale Bay , IP55

With Top, Bottom Cover, Front and Rear Steel Door,
3pcs Gland Plate, Eye Bolt, Swing Handle

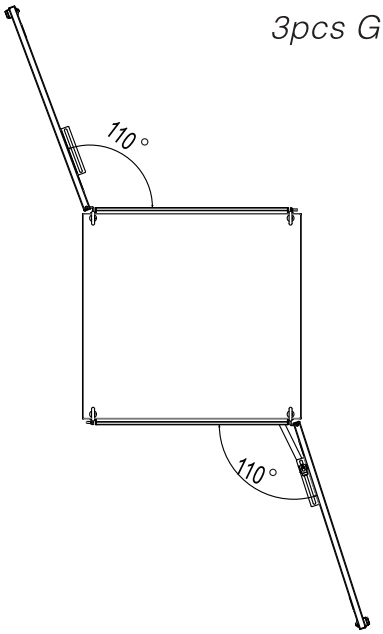

Dual-Access Construction

- Rear Door Door come with Swing Handle
- Front Steel Door come with Swing Handle
- Top Cover
- Eye Bolt (4pcs)
- Gland Plate in 3pcs
- 2pcs Support Rail

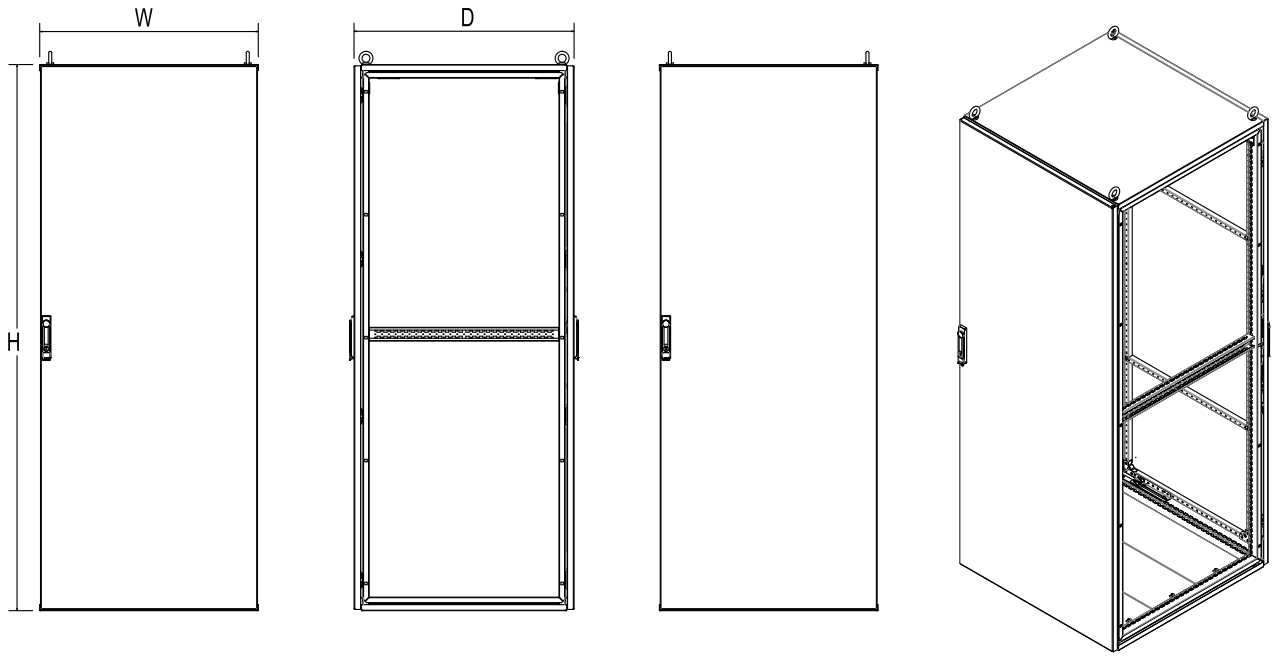

Dual Access Singale Bay, IP55

NO.	Catalog Number	Dimensions H(mm)	W(mm)	D(mm)	Side Panel	Base /Plinth	200mm Base /Plinth	Mounting Plate	Mounting Plate W/ Cover
1	MEDA 1664	1600	600	400	SP 164	BS 6040	DBS 6040	MP 166	MPC 166
2	MEDA 1665	1600	600	500	SP 165	BS 6050	DBS 6050	MP 166	MPC 166
3	MEDA 1666	1600	600	600	SP 166	BS 6060	DBS 6060	MP 166	MPC 166
4	MEDA 1668	1600	600	800	SP 168	BS 6080	DBS 6080	MP 166	MPC 166
5	MEDA 1684	1600	800	400	SP 164	BS 8040	DBS 8040	MP 168	MPC 168
6	MEDA 1685	1600	800	500	SP 165	BS 8050	DBS 8050	MP 168	MPC 168
7	MEDA 1686	1600	800	600	SP 166	BS 8060	DBS 8060	MP 168	MPC 168
8	MEDA 1688	1600	800	800	SP 168	BS 8080	DBS 8080	MP 168	MPC 168
9	MEDA 16104	1600	1000	400	SP 164	BS 10040	DBS 10040	MP 1610	MPC 1610
10	MEDA 16105	1600	1000	500	SP 165	BS 10050	DBS 10050	MP 1610	MPC 1610
11	MEDA 16106	1600	1000	600	SP 166	BS 10060	DBS 10060	MP 1610	MPC 1610
12	MEDA 16108	1600	1000	800	SP 168	BS 10080	DBS 10080	MP 1610	MPC 1610
13	MEDA 1864	1800	600	400	SP 184	BS 6040	DBS 6040	MP 186	MPC 186
14	MEDA 1865	1800	600	500	SP 185	BS 6050	DBS 6050	MP 186	MPC 186
15	MEDA 1866	1800	600	600	SP 186	BS 6060	DBS 6060	MP 186	MPC 186
16	MEDA 1868	1800	600	800	SP 188	BS 6080	DBS 6080	MP 186	MPC 186
17	MEDA 1884	1800	800	400	SP 184	BS 8040	DBS 8040	MP 188	MPC 188
18	MEDA 1885	1800	800	500	SP 185	BS 8050	DBS 8050	MP 188	MPC 188
19	MEDA 1886	1800	800	600	SP 186	BS 8060	DBS 8060	MP 188	MPC 188
20	MEDA 1888	1800	800	800	SP 188	BS 8080	DBS 8080	MP 188	MPC 188
21	MEDA 18104	1800	1000	400	SP 184	BS 10040	DBS 10040	MP 1810	MPC 1810
22	MEDA 18105	1800	1000	500	SP 185	BS 10050	DBS 10050	MP 1810	MPC 1810
23	MEDA 18106	1800	1000	600	SP 186	BS 10060	DBS 10060	MP 1810	MPC 1810
24	MEDA 18108	1800	1000	800	SP 188	BS 10080	DBS 10080	MP 1810	MPC 1810
25	MEDA 2064	2000	600	400	SP 204	BS 6040	DBS 6040	MP 206	MPC 206
26	MEDA 2065	2000	600	500	SP 205	BS 6050	DBS 6050	MP 206	MPC 206
27	MEDA 2066	2000	600	600	SP 206	BS 6060	DBS 6060	MP 206	MPC 206
28	MEDA 2068	2000	600	800	SP 208	BS 6080	DBS 6080	MP 206	MPC 206
29	MEDA 2084	2000	800	400	SP 204	BS 8040	DBS 8040	MP 208	MPC 208
30	MEDA 2085	2000	800	500	SP 205	BS 8050	DBS 8050	MP 208	MPC 208
31	MEDA 2086	2000	800	600	SP 206	BS 8060	DBS 8060	MP 208	MPC 208
32	MEDA 2088	2000	800	800	SP 208	BS 8080	DBS 8080	MP 208	MPC 208
33	MEDA 20104	2000	1000	400	SP 204	BS 10040	DBS 10040	MP 2010	MPC 2010
34	MEDA 20105	2000	1000	500	SP 205	BS 10050	DBS 10050	MP 2010	MPC 2010
35	MEDA 20106	2000	1000	600	SP 206	BS 10060	DBS 10060	MP 2010	MPC 2010
36	MEDA 20108	2000	1000	800	SP 208	BS 10080	DBS 10080	MP 2010	MPC 2010
37	MEDA 2266	2200	600	600	SP 226	BS 6060	DBS 6060	MP 226	MPC 226
38	MEDA 2268	2200	600	800	SP 228	BS 6080	DBS 6080	MP 226	MPC 226
39	MEDA 2278	2200	700	800	SP 229	BS 7080	DBS 7080	MP 227	MPC 227
40	MEDA 2279	2200	700	900	SP 226	BS 7090	DBS 7090	MP 227	MPC 227
41	MEDA 2286	2200	800	600	SP 228	BS 8060	DBS 8060	MP 228	MPC 228
42	MEDA 2288	2200	800	800	SP 228	BS 8080	DBS 8080	MP 228	MPC 228
43	MEDA 22105	2200	1000	500	SP 225	BS 10050	DBS 10050	MP 2210	MPC 2210
44	MEDA 22106	2200	1000	600	SP 226	BS 10060	DBS 10060	MP 2210	MPC 2210
45	MEDA 22108	2200	1000	800	SP 228	BS 10080	DBS 10080	MP 2210	MPC 2210

Note:
1. Side Panel 2pcs/set
2. Galvanized Steel Mounting Plate

cont. MEDA Series Modular Enclosures Package 2

Dual Access Double Bay , IP55

With Top, Bottom Cover, Front and Rear Overlapping Steel Door, 3pcs Gland Plate, Eye Bolt, Swing Handle

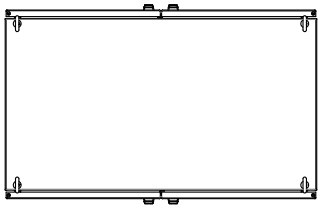

Dual-Access Construction

- Rear Overlapping Steel Door come with Swing Handle
- Front Overlapping Steel Door come with Swing Handle
- Top Cover
- Eye Bolt (4pcs)
- Gland Plate in 3pcs
- 2pcs Support Rail
- 2pcs Top Frame Support Rail

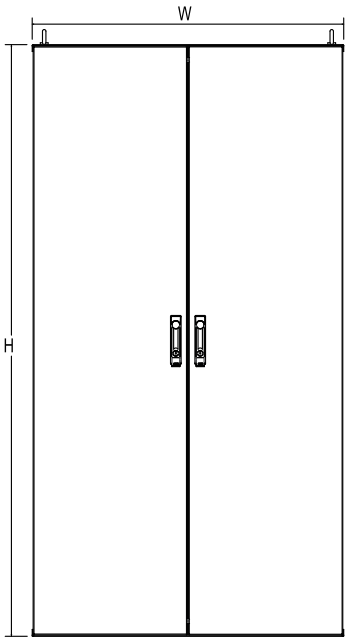

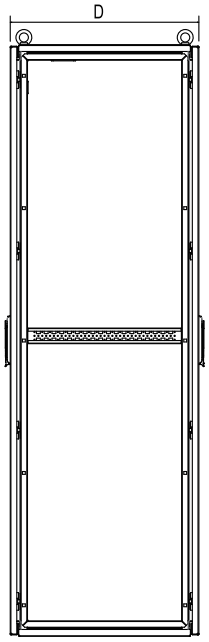

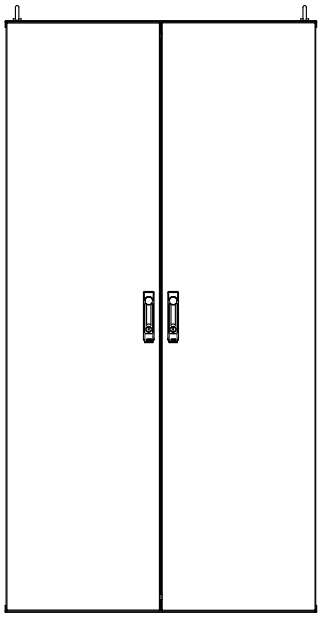

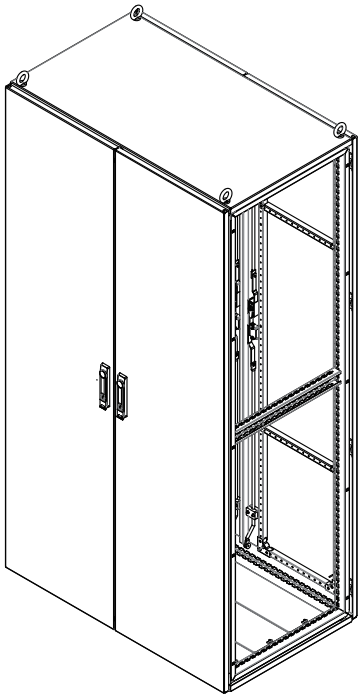

Dual Access Double Bay, IP55

NO.	Catalog Number	Dimensions H(mm)	W(mm)	D(mm)	Side Panel	Base /Plinth	200mm Base /Plinth	Mounting Plate	Mounting Plate W/ Cover
1	MEDA 7126	700	1200	600	SP 76	BS 12060	DBS 12060	MP 712	MPC 712
2	MEDA 14124	1400	1200	400	SP 144	BS 12040	DBS 12040	MP 1412	MPC 1412
3	MEDA 14125	1400	1200	500	SP 145	BS 12050	DBS 12050	MP 1412	MPC 1412
4	MEDA 16124	1600	1200	400	SP 164	BS 12040	DBS 12040	MP 1612	MPC 1612
5	MEDA 16125	1600	1200	500	SP 165	BS 12050	DBS 12050	MP 1612	MPC 1612
6	MEDA 16126	1600	1200	600	SP 166	BS 12060	DBS 12060	MP 1612	MPC 1612
7	MEDA 16128	1600	1200	800	SP 168	BS 12080	DBS 12080	MP 1612	MPC 1612
8	MEDA 18124	1800	1200	400	SP 184	BS 12040	DBS 12040	MP 1812	MPC 1812
9	MEDA 18125	1800	1200	500	SP 185	BS 12050	DBS 12050	MP 1812	MPC 1812
10	MEDA 18126	1800	1200	600	SP 186	BS 12060	DBS 12060	MP 1812	MPC 1812
11	MEDA 18128	1800	1200	800	SP 188	BS 12080	DBS 12080	MP 1812	MPC 1812
12	MEDA 20124	2000	1200	400	SP 204	BS 12040	DBS 12040	MP 2012	MPC 2012
13	MEDA 20125	2000	1200	500	SP 205	BS 12050	DBS 12050	MP 2012	MPC 2012
14	MEDA 20126	2000	1200	600	SP 206	BS 12060	DBS 12060	MP 2012	MPC 2012
15	MEDA 20128	2000	1200	800	SP 208	BS 12080	DBS 12080	MP 2012	MPC 2012
16	MEDA 22126	2200	1200	600	SP 226	BS 12060	DBS 12060	MP 2212	MPC 2212
17	MEDA 22128	2200	1200	800	SP 228	BS 12080	DBS 12080	MP 2212	MPC 2212

Note:
1. Side Panel 2pcs/set
2. Galvanized Steel Mounting Plate

MEG Series Modular Enclosures Glass Door Package 3

Glass Door Single Bay , IP55

With Top, Bottom Cover, Front Glass Door and Rear Panel, 3pcs Gland Plate, Eye Bolt, Swing Handle

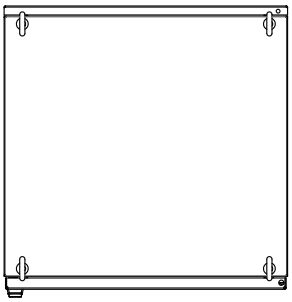

Glass Door Construction

- Rear Door
- Front Glass Door with Swing Handle
- Top Cover
- Eye Bolt (4pcs)
- Gland Plate in 3pcs
- 2pcs Support Rail on Depth

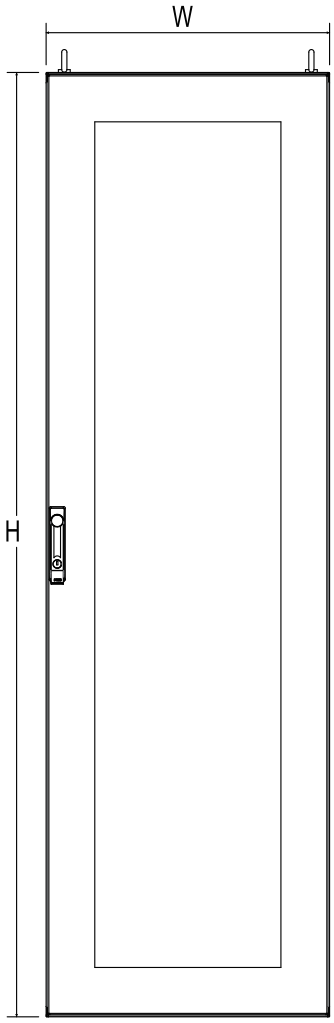

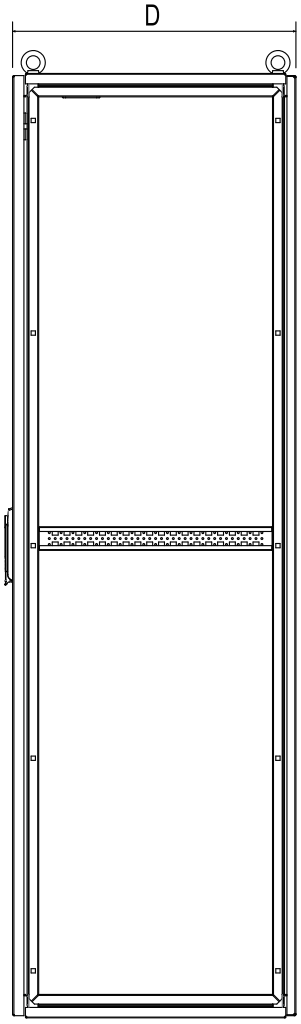

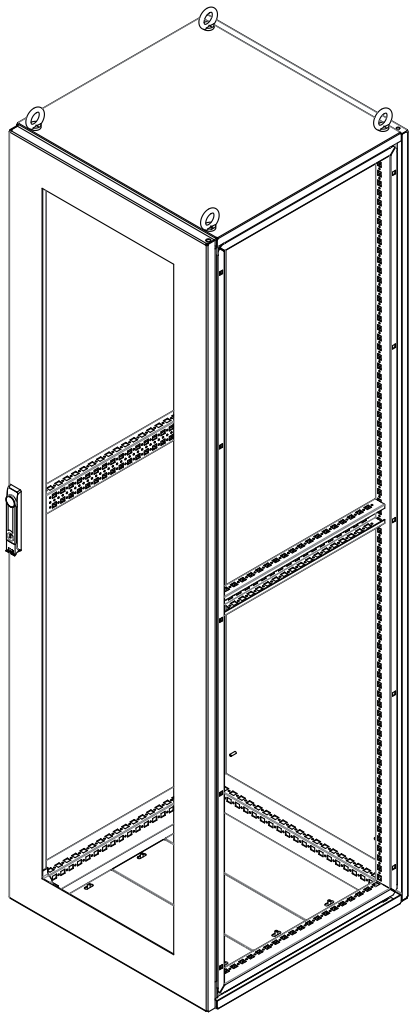

Modular Enclosure with Glass Door, IP55

NO.	Catalog Number	Dimensions H(mm)	W(mm)	D(mm)	Side Panel	Base /Plinth	200mm Base /Plinth	Mounting Plate
1	MEG 1664	1600	600	400	SP 164	BS 6040	DBS 6040	MP 166
2	MEG 1665	1600	600	500	SP 165	BS 6050	DBS 6050	MP 166
3	MEG 1666	1600	600	600	SP 166	BS 6060	DBS 6060	MP 166
4	MEG 1668	1600	600	800	SP 168	BS 6080	DBS 6080	MP 166
5	MEG 1684	1600	800	400	SP 164	BS 8040	DBS 8040	MP 168
6	MEG 1685	1600	800	500	SP 165	BS 8050	DBS 8050	MP 168
7	MEG 1686	1600	800	600	SP 166	BS 8060	DBS 8060	MP 168
8	MEG 1688	1600	800	800	SP 168	BS 8080	DBS 8080	MP 168
9	MEG 16104	1600	1000	400	SP 164	BS 10040	DBS 10040	MP 1610
10	MEG 16105	1600	1000	500	SP 165	BS 10050	DBS 10050	MP 1610
11	MEG 16106	1600	1000	600	SP 166	BS 10060	DBS 10060	MP 1610
12	MEG 16108	1600	1000	800	SP 168	BS 10080	DBS 10080	MP 1610
13	MEG 1864	1800	600	400	SP 184	BS 6040	DBS 6040	MP 186
14	MEG 1865	1800	600	500	SP 185	BS 6050	DBS 6050	MP 186
15	MEG 1866	1800	600	600	SP 186	BS 6060	DBS 6060	MP 186
16	MEG 1868	1800	600	800	SP 188	BS 6080	DBS 6080	MP 186
17	MEG 1884	1800	800	400	SP 184	BS 8040	DBS 8040	MP 188
18	MEG 1885	1800	800	500	SP 185	BS 8050	DBS 8050	MP 188
19	MEG 1886	1800	800	600	SP 186	BS 8060	DBS 8060	MP 188
20	MEG 1888	1800	800	800	SP 188	BS 8080	DBS 8080	MP 188
21	MEG 18104	1800	1000	400	SP 184	BS 10040	DBS 10040	MP 1810
22	MEG 18105	1800	1000	500	SP 185	BS 10050	DBS 10050	MP 1810
23	MEG 18106	1800	1000	600	SP 186	BS 10060	DBS 10060	MP 1810
24	MEG 18108	1800	1000	800	SP 188	BS 10080	DBS 10080	MP 1810
25	MEG 2064	2000	600	400	SP 204	BS 6040	DBS 6040	MP 206
26	MEG 2065	2000	600	500	SP 205	BS 6050	DBS 6050	MP 206
27	MEG 2066	2000	600	600	SP 206	BS 6060	DBS 6060	MP 206
28	MEG 2068	2000	600	800	SP 208	BS 6080	DBS 6080	MP 206
29	MEG 2084	2000	800	400	SP 204	BS 8040	DBS 8040	MP 208
30	MEG 2085	2000	800	500	SP 205	BS 8050	DBS 8050	MP 208
31	MEG 2086	2000	800	600	SP 206	BS 8060	DBS 8060	MP 208
32	MEG 2088	2000	800	800	SP 208	BS 8080	DBS 8080	MP 208
33	MEG 20104	2000	1000	400	SP 204	BS 10040	DBS 10040	MP 2010
34	MEG 20105	2000	1000	500	SP 205	BS 10050	DBS 10050	MP 2010
35	MEG 20106	2000	1000	600	SP 206	BS 10060	DBS 10060	MP 2010
36	MEG 20108	2000	1000	800	SP 208	BS 10080	DBS 10080	MP 2010
37	MEG 2266	2200	600	600	SP 226	BS 6060	DBS 6060	MP 226
38	MEG 2268	2200	600	800	SP 228	BS 6080	DBS 6080	MP 226
39	MEG 2278	2200	700	800	SP 229	BS 7080	DBS 7080	MP 227
40	MEG 2279	2200	700	900	SP 226	BS 7090	DBS 7090	MP 227
41	MEG 2286	2200	800	600	SP 228	BS 8060	DBS 8060	MP 228
42	MEG 2288	2200	800	800	SP 228	BS 8080	DBS 8080	MP 228
43	MEG 22105	2200	1000	500	SP 225	BS 10050	DBS 10050	MP 2210
44	MEG 22106	2200	1000	600	SP 226	BS 10060	DBS 10060	MP 2210
45	MEG 22108	2200	1000	800	SP 228	BS 10080	DBS 10080	MP 2210

Note:
1. Side Panel 2pcs/set
2. Galvanized Steel Mounting Plate

Data subject to change without notice.

cont. MEG Series Modular Enclosures Glass Door Package 3

Glass Door Double Bay, IP55

With Top, Bottom Cover, Front Glass Door and Rear Panel, 3pcs Gland Plate, Eye Bolt, Swing Handle

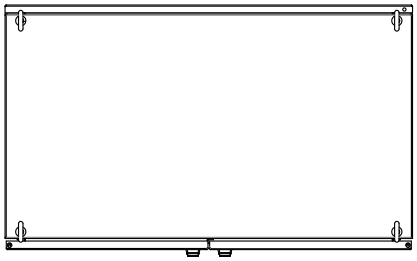

Glass Door Construction

- Rear Panel
- Front Glass Door with Swing Handle
- Top Cover
- Eye Bolt (4pcs)
- Gland Plate in 3pcs
- 2pcs Support Rail on Depth

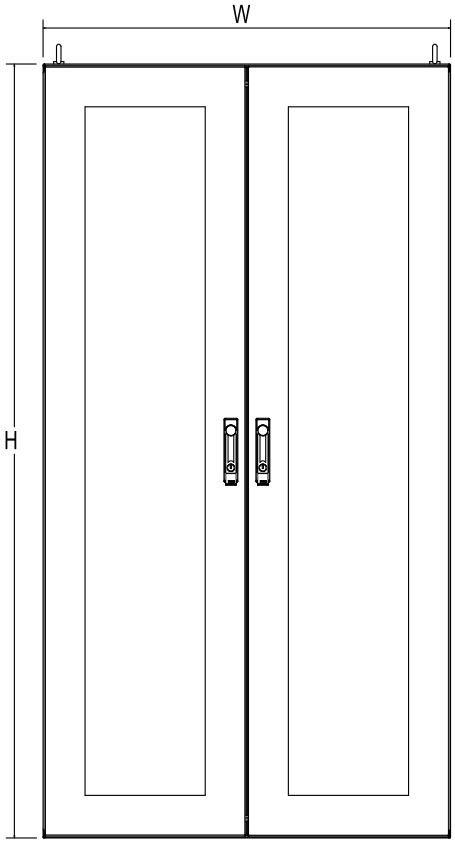

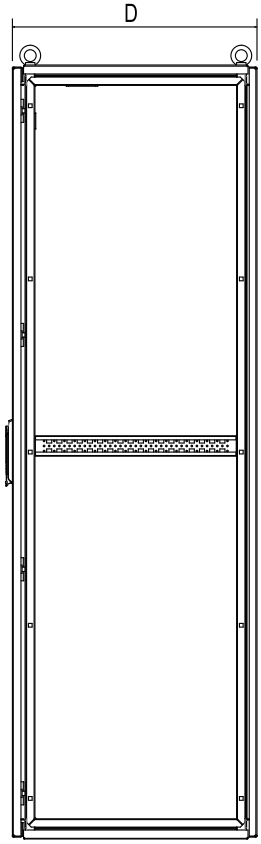

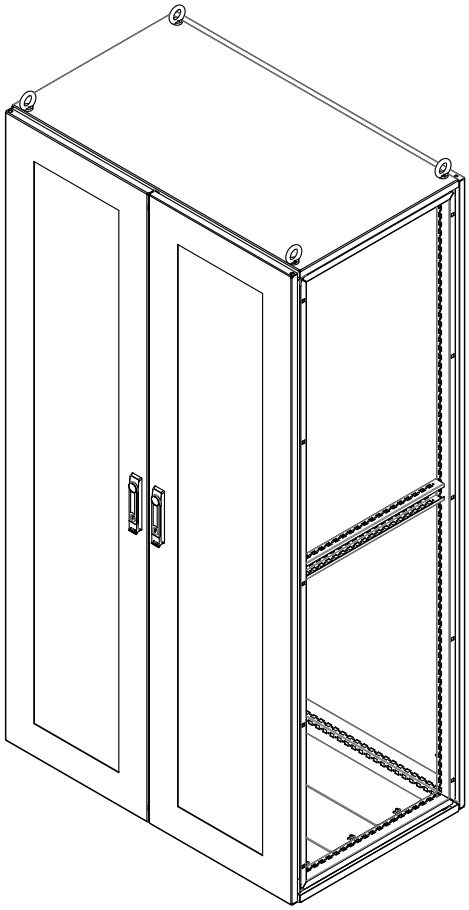

Glass Door Double Bay, IP55

NO.	Catalog Number	Dimensions H(mm)	W(mm)	D(mm)	Side Panel	Base /Plinth	Mounting Plate
1	MEG 7126	700	1200	600	SP 76	BS 12060	MP 712
2	MEG 14124	1400	1200	400	SP 144	BS 12040	MP 1412
3	MEG 14125	1400	1200	500	SP 145	BS 12050	MP 1412
4	MEG 14164	1400	1600	400	SP 144	BS 16040	MP 1416
5	MEG 14165	1400	1600	500	SP 145	BS 16050	MP 1416
6	MEG 16124	1600	1200	400	SP 164	BS 12040	MP 1612
7	MEG 16125	1600	1200	500	SP 165	BS 12050	MP 1612
8	MEG 16126	1600	1200	600	SP 166	BS 12060	MP 1612
9	MEG 16128	1600	1200	800	SP 168	BS 12080	MP 1612
10	MEG 18124	1800	1200	400	SP 184	BS 12040	MP 1812
11	MEG 18125	1800	1200	500	SP 185	BS 12050	MP 1812
12	MEG 18126	1800	1200	600	SP 186	BS 12060	MP 1812
13	MEG 18128	1800	1200	800	SP 188	BS 12080	MP 1812
14	MEG 18164	1800	1600	400	SP 184	BS 16040	MP 1816
15	MEG 18165	1800	1600	500	SP 185	BS 16050	MP 1816
16	MEG 18166	1800	1600	600	SP 186	BS 16060	MP 1816
17	MEG 18168	1800	1600	800	SP 188	BS 16080	MP 1816
18	MEG 20124	2000	1200	400	SP 204	BS 12040	MP 2012
19	MEG 20125	2000	1200	500	SP 205	BS 12050	MP 2012
20	MEG 20126	2000	1200	600	SP 206	BS 12060	MP 2012
21	MEG 20128	2000	1200	800	SP 208	BS 12080	MP 2012
22	MEG 20164	2000	1600	400	SP 204	BS 16040	MP 2016
23	MEG 20165	2000	1600	500	SP 205	BS 16050	MP 2016
24	MEG 20166	2000	1600	600	SP 206	BS 16060	MP 2016
25	MEG 20168	2000	1600	800	SP 208	BS 16080	MP 2016
26	MEG 22126	2200	1200	600	SP 226	BS 12060	MP 2212
27	MEG 22128	2200	1200	800	SP 228	BS 12080	MP 2212

Note:
1. Side Panel 2pcs/set
2. Galvanized Steel Mounting Plate

MEDG Series Modular Enclosures Glass Door Package 4

Front Glass Door with Rear Steel Door, Single Bay, IP55

With Top, Bottom Cover, Front Glass Door and Rear Door, 3 pcs Gland Plate, Eye Bolt, Swing Handle

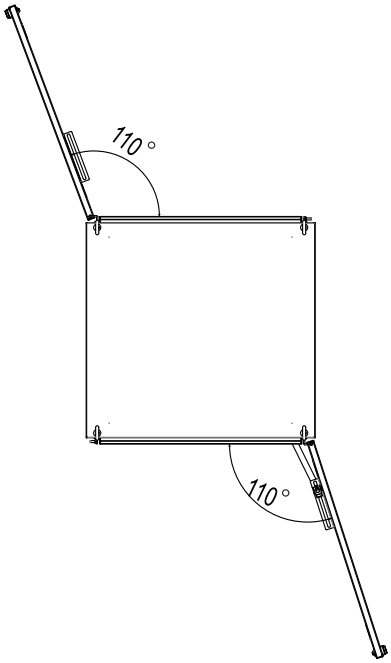

Dual-Access Construction

- Rear Door
- Front Glass Door with Swing Handle
- Top Cover
- Eye Bolt (4pcs)
- Gland Plate in 3pcs
- 2pcs Support Rail

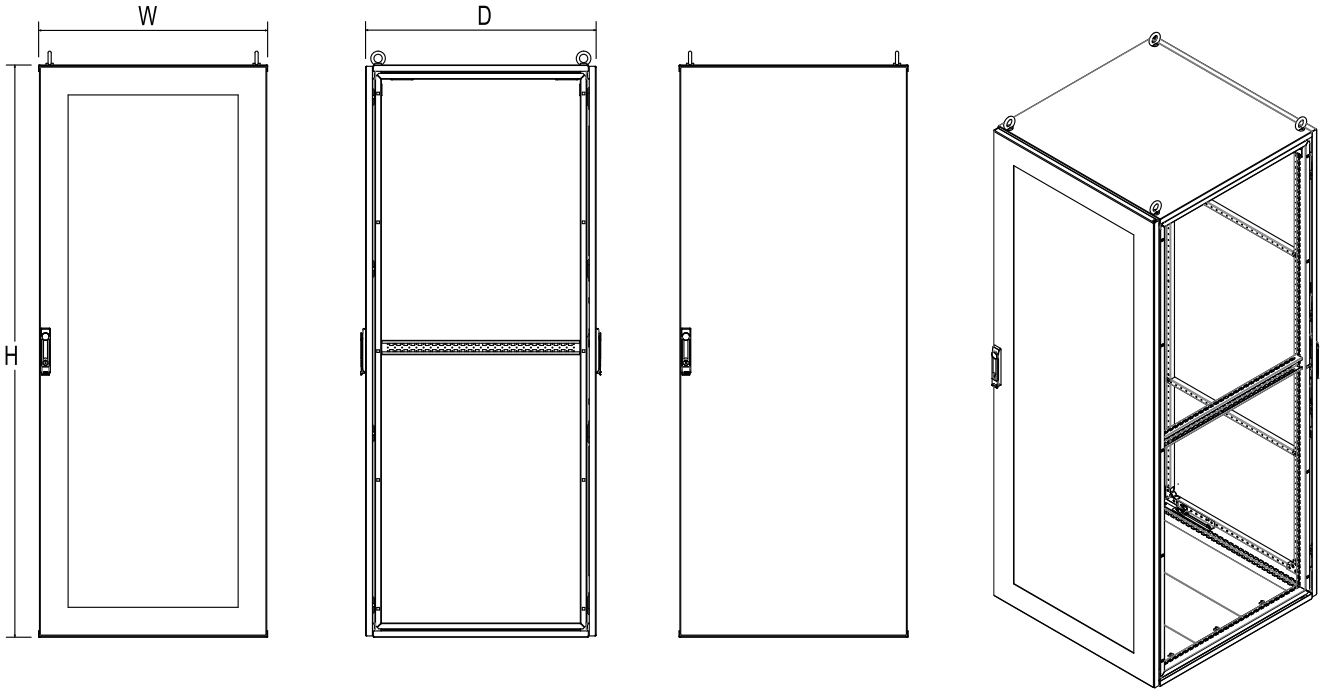

Front Glass Door with Rear Steel Door, Singale Bay, IP55

NO.	Catalog Number	Dimensions H(mm)	W(mm)	D(mm)	Side Panel	Base /Plinth	Mounting Plate
1	MEDG 1664	1600	600	400	SP 164	BS 6040	MP 166
2	MEDG 1665	1600	600	500	SP 165	BS 6050	MP 166
3	MEDG 1666	1600	600	600	SP 166	BS 6060	MP 166
4	MEDG 1668	1600	600	800	SP 168	BS 6080	MP 166
5	MEDG 1684	1600	800	400	SP 164	BS 8040	MP 168
6	MEDG 1685	1600	800	500	SP 165	BS 8050	MP 168
7	MEDG 1686	1600	800	600	SP 166	BS 8060	MP 168
8	MEDG 1688	1600	800	800	SP 168	BS 8080	MP 168
9	MEDG 16104	1600	1000	400	SP 164	BS 10040	MP 1610
10	MEDG 16105	1600	1000	500	SP 165	BS 10050	MP 1610
11	MEDG 16106	1600	1000	600	SP 166	BS 10060	MP 1610
12	MEDG 16108	1600	1000	800	SP 168	BS 10080	MP 1610
13	MEDG 1864	1800	600	400	SP 184	BS 6040	MP 186
14	MEDG 1865	1800	600	500	SP 185	BS 6050	MP 186
15	MEDG 1866	1800	600	600	SP 186	BS 6060	MP 186
16	MEDG 1868	1800	600	800	SP 188	BS 6080	MP 186
17	MEDG 1884	1800	800	400	SP 184	BS 8040	MP 188
18	MEDG 1885	1800	800	500	SP 185	BS 8050	MP 188
19	MEDG 1886	1800	800	600	SP 186	BS 8060	MP 188
20	MEDG 1888	1800	800	800	SP 188	BS 8080	MP 188
21	MEDG 18104	1800	1000	400	SP 184	BS 10040	MP 1810
22	MEDG 18105	1800	1000	500	SP 185	BS 10050	MP 1810
23	MEDG 18106	1800	1000	600	SP 186	BS 10060	MP 1810
24	MEDG 18108	1800	1000	800	SP 188	BS 10080	MP 1810
25	MEDG 2064	2000	600	400	SP 204	BS 6040	MP 206
26	MEDG 2065	2000	600	500	SP 205	BS 6050	MP 206
27	MEDG 2066	2000	600	600	SP 206	BS 6060	MP 206
28	MEDG 2068	2000	600	800	SP 208	BS 6080	MP 206
29	MEDG 2084	2000	800	400	SP 204	BS 8040	MP 208
30	MEDG 2085	2000	800	500	SP 205	BS 8050	MP 208
31	MEDG 2086	2000	800	600	SP 206	BS 8060	MP 208
32	MEDG 2088	2000	800	800	SP 208	BS 8080	MP 208
33	MEDG 20104	2000	1000	400	SP 204	BS 10040	MP 2010
34	MEDG 20105	2000	1000	500	SP 205	BS 10050	MP 2010
35	MEDG 20106	2000	1000	600	SP 206	BS 10060	MP 2010
36	MEDG 20108	2000	1000	800	SP 208	BS 10080	MP 2010
37	MEDG 2266	2200	600	600	SP 226	BS 6060	MP 226
38	MEDG 2268	2200	600	800	SP 228	BS 6080	MP 226
39	MEDG 2278	2200	700	800	SP 229	BS 7080	MP 227
40	MEDG 2279	2200	700	900	SP 226	BS 7090	MP 227
41	MEDG 2286	2200	800	600	SP 228	BS 8060	MP 228
42	MEDG 2288	2200	800	800	SP 228	BS 8080	MP 228
43	MEDG 22105	2200	1000	500	SP 225	BS 10050	MP 2210
44	MEDG 22106	2200	1000	600	SP 226	BS 10060	MP 2210
45	MEDG 22108	2200	1000	800	SP 228	BS 10080	MP 2210

Note:
1. Side Panel 2pcs/set
2. Galvanized Steel Mounting Plate

cont. MEG Series Modular Enclosures Glass Door Package 4

Glass Door Double Bay, IP55

With Top, Bottom Cover, Front Glass Door and Rear Panel, 3pcs Gland Plate, Eye Bolt, Swing Handle

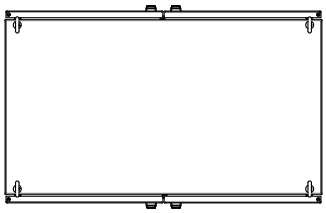

Glass Door Construction

- Rear Panel
- Front Glass Door with Swing Handle
- Top Cover
- Eye Bolt (4pcs)
- Gland Plate in 3pcs
- 2pcs Support Rail on Depth

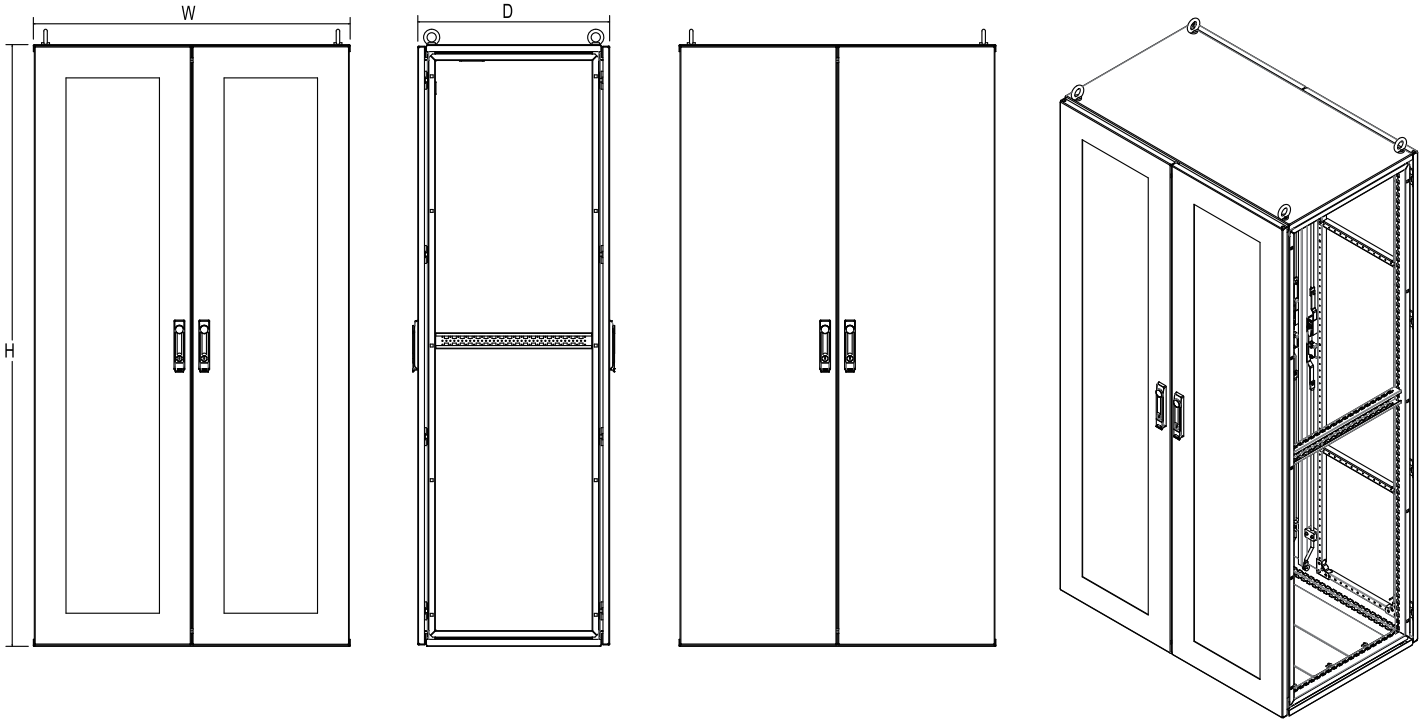

Double Bay, Front Glass Door with Rear Steel Door, IP55

NO.	Catalog Number	Dimensions H(mm)	W(mm)	D(mm)	Side Panel	Base /Plinth	Mounting Plate
1	MEDG 7126	700	1200	600	SP 76	BS 12060	MP 712
2	MEDG 14124	1400	1200	400	SP 144	BS 12040	MP 1412
3	MEDG 14125	1400	1200	500	SP 145	BS 12050	MP 1412
4	MEDG 14164	1400	1600	400	SP 144	BS 16040	MP 1416
5	MEDG 14165	1400	1600	500	SP 145	BS 16050	MP 1416
6	MEDG 16124	1600	1200	400	SP 164	BS 12040	MP 1612
7	MEDG 16125	1600	1200	500	SP 165	BS 12050	MP 1612
8	MEDG 16126	1600	1200	600	SP 166	BS 12060	MP 1612
9	MEDG 16128	1600	1200	800	SP 168	BS 12080	MP 1612
10	MEDG 18124	1800	1200	400	SP 184	BS 12040	MP 1812
11	MEDG 18125	1800	1200	500	SP 185	BS 12050	MP 1812
12	MEDG 18126	1800	1200	600	SP 186	BS 12060	MP 1812
13	MEDG 18128	1800	1200	800	SP 188	BS 12080	MP 1812
14	MEDG 18164	1800	1600	400	SP 184	BS 16040	MP 1816
15	MEDG 18165	1800	1600	500	SP 185	BS 16050	MP 1816
16	MEDG 18166	1800	1600	600	SP 186	BS 16060	MP 1816
17	MEDG 18168	1800	1600	800	SP 188	BS 16080	MP 1816
18	MEDG 20124	2000	1200	400	SP 204	BS 12040	MP 2012
19	MEDG 20125	2000	1200	500	SP 205	BS 12050	MP 2012
20	MEDG 20126	2000	1200	600	SP 206	BS 12060	MP 2012
21	MEDG 20128	2000	1200	800	SP 208	BS 12080	MP 2012
22	MEDG 20164	2000	1600	400	SP 204	BS 16040	MP 2016
23	MEDG 20165	2000	1600	500	SP 205	BS 16050	MP 2016
24	MEDG 20166	2000	1600	600	SP 206	BS 16060	MP 2016
25	MEDG 20168	2000	1600	800	SP 208	BS 16080	MP 2016
26	MEDG 22126	2200	1200	600	SP 226	BS 12060	MP 2212
27	MEDG 22128	2200	1200	800	SP 228	BS 12080	MP 2212

Note:
1. Side Panel 2pcs/set
2. Galvanized Steel Mounting Plate

ME Series 19” Rack Accessories

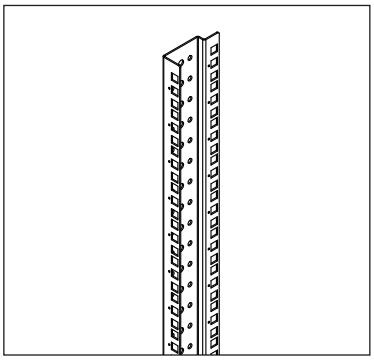

19” Rack Frame

For Enclosure Height 600mm and 700mm

NO.		Catalog Number	Rack Unit
1	1400mm	MR 14	29
2	1600mm	MR 16	33
3	1800mm	MR 18	38
4	2000mm	MR 20	42
5	2200mm	MR 22	47

* 2pcs per set
* Color: RAL 7035

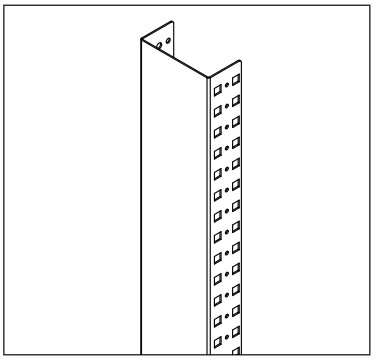

Rack Adapter

Rack Adapter, with Enclosure width more then 800mm

NO.		Catalog Number	Rack Adapter
1	800mm	MR 198	MRA 8
2	900mm	MR 199	MRA 9
3	1000mm	MR 1910	MRA 10

* 2pcs per set
* Color: RAL 7035

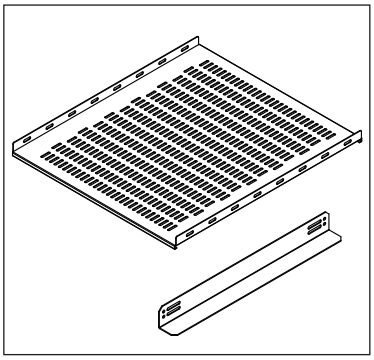

Rack Fixed Shelf

19" Rack Fixed Shelf

NO.	W(mm)	D(mm)	Catalog Number
1	477	349	MRFS 19D3
2	477	449	MRFS 19D4
3	477	649	MRFS 19D6
4	477	749	MRFS 19D7

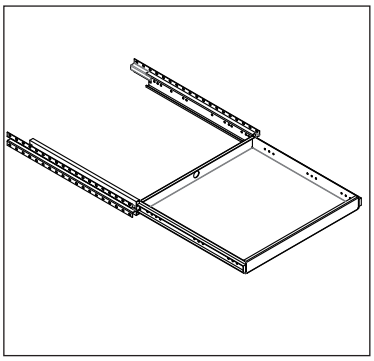

Rack Pull-Out Shelf

19" Rack Pull-Out Shelf

NO.	W(mm)	D(mm)	Catalog Number
1	477	349	MROS 19D3
2	477	449	MROS 19D4
3	477	649	MROS 19D6
4	477	749	MROS 19D7

ME Series Accessories

Quick Fix Grid Rails

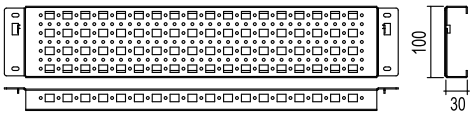

4 Rows of Holes

NO.	Catalog Number	ME Depth/Width	A (mm)	Packs of
1	MEGQ 400100	400	292	2
2	MEGQ 500100	500	392	2
3	MEGQ 600100	600	492	2
4	MEGQ 700100	700	592	2
5	MEGQ 800100	800	692	2
6	MEGQ 900100	900	792	2

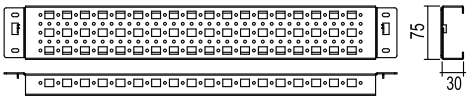

3 Rows of Holes

NO.	Catalog Number	ME Depth/Width	A (mm)	Packs of
1	MEGQ 40075	400	292	2
2	MEGQ 50075	500	392	2
3	MEGQ 60075	600	492	2
4	MEGQ 70075	700	592	2
5	MEGQ 80075	800	692	2
6	MEGQ 90075	900	792	2

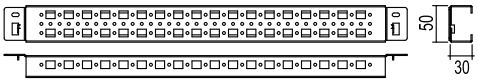

2 Rows of Holes

NO.	Catalog Number	ME Depth/Width	A (mm)	Packs of
1	MEGQ 40050	400	292	2
2	MEGQ 50050	500	392	2
3	MEGQ 60050	600	492	2
4	MEGQ 70050	700	592	2
5	MEGQ 80050	800	692	2
6	MEGQ 90050	900	792	2

1 Rows of Holes

NO.	Catalog Number	ME Depth/Width	A (mm)	Packs of
1	MEGQ 40025	400	292	2
2	MEGQ 50025	500	392	2
3	MEGQ 60025	600	492	2
4	MEGQ 70025	700	592	2
5	MEGQ 80025	800	692	2
6	MEGQ 90025	900	792	2

NS

FIXED SHELF

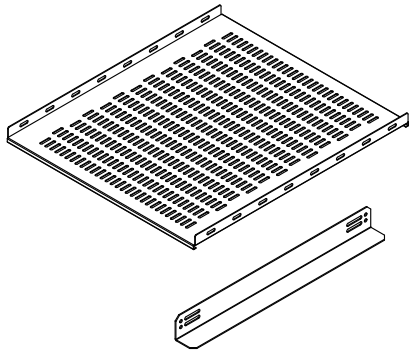

Material: Mild Steel
Finish: RAL 7035
Max Load:

NO.	Catalog Number	Dimensions W(mm)	Dimensions D(mm)	Accutual Dimensions W(mm)	Accutual Dimensions D(mm)
1	MFS 0604	600	400		
2	MFS 0605	600	500		
3	MFS 0606	600	600		
4	MFS 0608	600	800		
5	MFS 0804	800	400		
6	MFS 0805	800	500		
7	MFS 0806	800	600		
8	MFS 0808	800	800		
9	MFS 1004	1000	400		
10	MFS 1005	1000	500		
11	MFS 1006	1000	600		
12	MFS 1008	1000	800		

PULL OUT SHELF

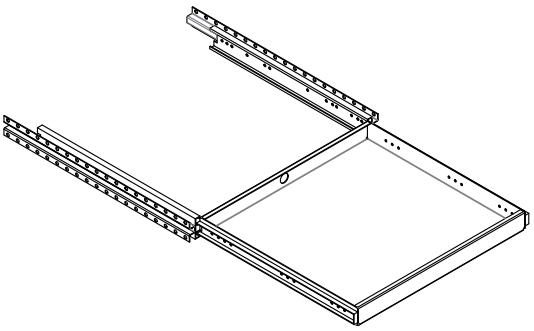

Material: Mild Steel
Finish: RAL 7035
Max Load:

NO.	Catalog Number	Dimensions H(mm)	Dimensions W(mm)	Accutual Dimensions W(mm)	Accutual Dimensions D(mm)
1	MOS 0604	600	400		
2	MOS 0605	600	500		
3	MOS 0606	600	600		
4	MOS 0608	600	800		
5	MOS 0804	800	400		
6	MOS 0805	800	500		
7	MOS 0806	800	600		
8	MOS 0808	800	800		
9	MOS 1004	1000	400		
10	MOS 1005	1000	500		
11	MOS 1006	1000	600		
12	MOS 1008	1000	800		

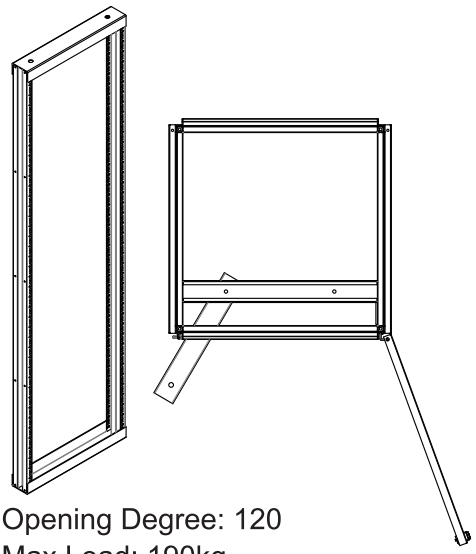

Opening Degree: 120
Max Load: 190kg
Finish: RAL7035

SWING OUT FRAME

NO.	Catalog Number	Dimensions H(mm)	Dimensions W(mm)	Rack Unit
1	MOF 166	1600	600	30
2	MOF 168	1600	800	30
3	MOF 1610	1600	1000	30
4	MOF 186	1800	600	35
5	MOF 188	1800	800	35
6	MOF 1810	1800	1000	35
7	MOF 206	2000	600	39
8	MOF 208	2000	800	39
9	MOF 2010	2000	1000	39
10	MOF 226	2200	600	44
11	MOF 227	2200	700	44
12	MOF 228	2200	800	44
13	MOF 2210	2200	1000	44

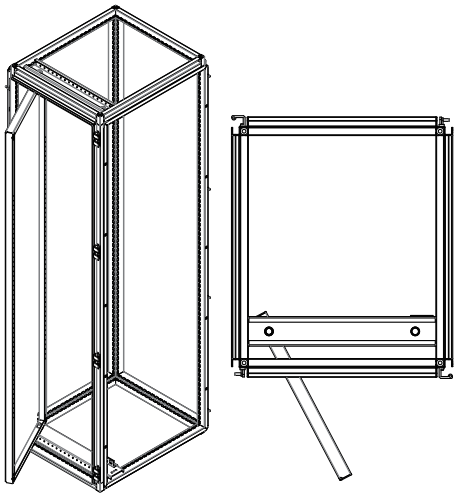

Opening Degree: 120
Max Load: 190kg
Finish: RAL7035

SWING OUT MOUNTING PLATE

NO.	Catalog Number	Dimensions H(mm)	Dimensions W(mm)	Mounting Plate Dimensions
1	MSP 166	1600	600	
2	MSP 168	1600	800	
3	MSP 186	1800	600	
4	MSP 188	1800	800	
5	MSP 206	2000	600	
6	MSP 208	2000	800	
7	MSP 226	2200	600	
8	MSP 227	2200	700	
9	MSP 228	2200	800	

Joining Bracket

Joining Bracket made of cool roll steel with zinc plated, one set with 6pcs

NO.	Catalogue Number
1	CS009JBK

Top Joining Bracket

NO.	Catalogue Number
1	CS009TJB

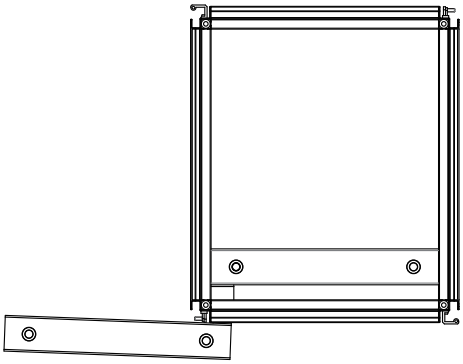

180 Degree Swing Frame Kit

NO.	Catalogue Number
1	CS010SFK

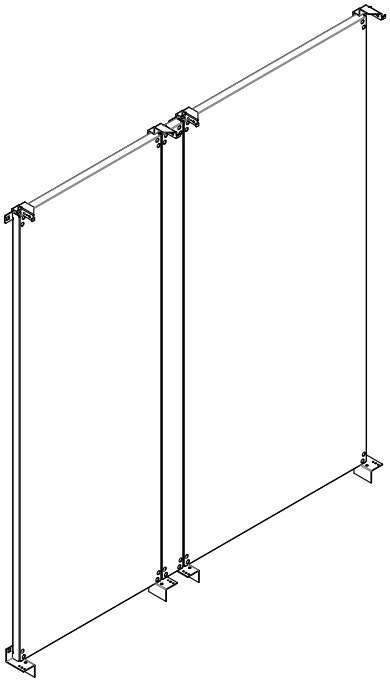

Joining Sub Mounting Plate

NO.	Catalogue Number	H(mm)
1	JMP 16	1600
2	JMP 17	1700
3	JMP 18	1800
4	JMP 19	1900
5	JMP 20	2000
6	JMP 21	2100
7	JMP 22	2200

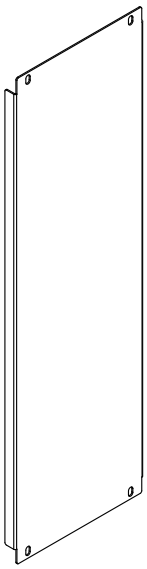

Side Mounting Plate

NO.	Catalog Number	Dimensions H(mm)	W(mm)	NO.	Catalog Number	Dimensions H(mm)	W(mm)
1	SMP 164	1600	400	9	SMP 204	2000	400
2	SMP 165	1600	500	10	SMP 205	2000	500
3	SMP 166	1600	600	11	SMP 206	2000	600
4	SMP 168	1600	800	12	SMP 208	2000	800
5	SMP 184	1800	400	13	SMP 224	2200	400
6	SMP 185	1800	500	14	SMP 225	2200	500
7	SMP 186	1800	600	15	SMP 226	2200	600
8	SMP 188	1800	800	16	SMP 228	2200	800

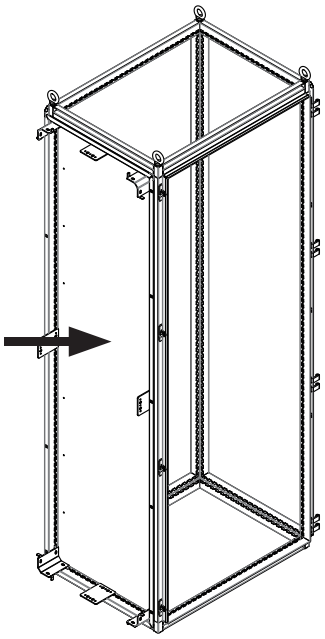

Divider Mounting Plate

NO.	Catalog Number	Dimensions H(mm)	W(mm)	NO.	Catalog Number	Dimensions H(mm)	W(mm)
1	DMP 164	1600	400	9	DMP 204	2000	400
2	DMP 165	1600	500	10	DMP 205	2000	500
3	DMP 166	1600	600	11	DMP 206	2000	600
4	DMP 168	1600	800	12	DMP 208	2000	800
5	DMP 184	1800	400	13	DMP 224	2200	400
6	DMP 185	1800	500	14	DMP 225	2200	500
7	DMP 186	1800	600	15	DMP 226	2200	600
8	DMP 188	1800	800	16	DMP 228	2200	800

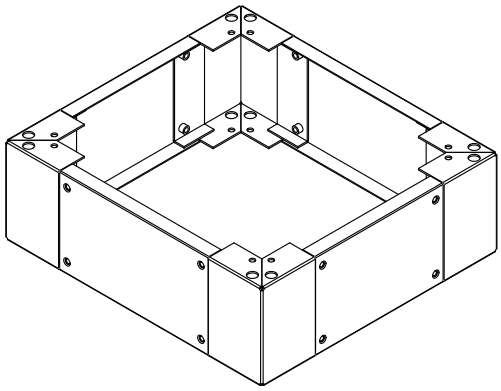

200mm Base/Plinth

NO.	Catalog Number	Dimensions H(mm)	Dimensions W(mm)	NO.	Catalog Number	Dimensions H(mm)	Dimensions W(mm)
1	BSD 6040	600	400	7	BSD 8060	800	600
2	BSD 6050	600	500	8	BSD 8080	800	800
3	BSD 6060	600	600	9	BSD 10040	1000	400
4	BSD 6080	600	800	10	BSD 10050	1000	500
5	BSD 8040	800	400	11	BSD 10060	1000	600
6	BSD 8050	800	500	12	BSD 10080	1000	800

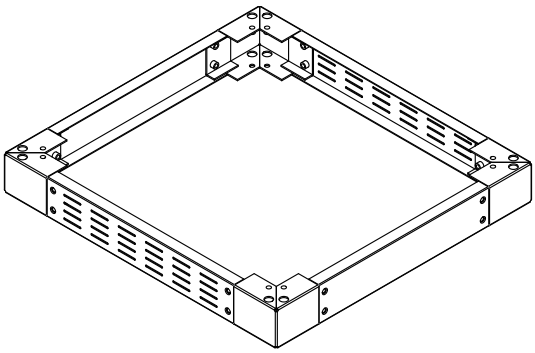

Vented Base/Plinth

NO.	Catalog Number	Dimensions H(mm)	Dimensions W(mm)	NO.	Catalog Number	Dimensions H(mm)	Dimensions W(mm)
1	BSV 6040	600	400	7	BSV 8060	800	600
2	BSV 6050	600	500	8	BSV 8080	800	800
3	BSV 6060	600	600	9	BSV 10040	1000	400
4	BSV 6080	600	800	10	BSV 10050	1000	500
5	BSV 8040	800	400	11	BSV 10060	1000	600
6	BSV 8050	800	500	12	BSV 10080	1000	800

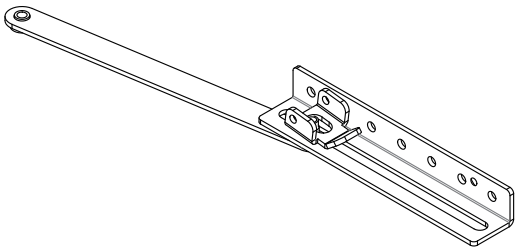

Door Stop

NO.	Catalogue Number
1	CS006DS

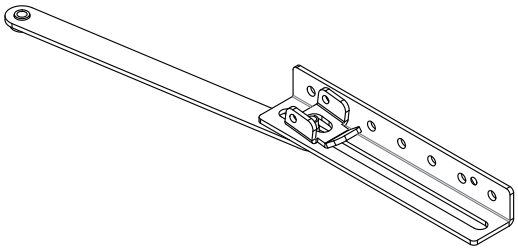

Door Stop for Swing Frame

NO.	Catalogue Number
1	CS007DSSF

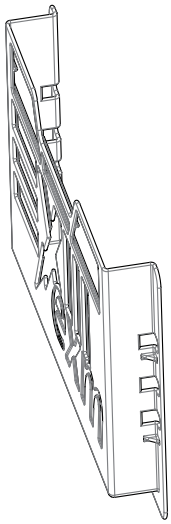

Data Pocket

NO.	Catalogue Number
1	CS005Data

Casters

NO.	Catalogue Number
1	CS008A
2	CS008B

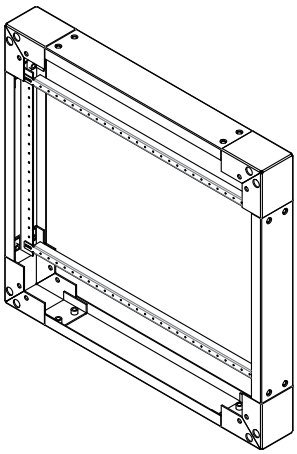

Cable Claim

NO.	Catalogue Number
1	CS008A
2	CS008B

Data subject to change without notice.

CO Series One-Piece Desk Consoles

IP55

Construction

- 1.5mm steel body, doors and sloped top door
- 2.0mm galvanized mounting panel
- Seams continuously welded
- High quality automatic seamless foam-in-place gasket
- Heavy-duty hinges
- Quarter-turn lock(s) for top door
- Grounding studs on body and door

Finish

- RAL 7032 power coating, RAL 7035 and other color available
- Mounting plate in galvanized finish

Standard

- IP55, IEC 60529
- RoHS Compliant
- CE

Custom Enclosures

Nonstone offers high quality custom enclosures and modification services at competitive price. For information, please contact your NonStone representative.

- Other finish color and textures
- Cutouts and special holes in body and doors.
- Custom doors
- Custom body
- Special or custom accessories

RoHS COMPLIANT

CE

Single-Bay

NO.	Catalog Number	Dimensions H(mm)	W(mm)	D(mm)
1	CO 1006050	1000	600	500
2	CO 1008050	1000	800	500

Double-Bay

NO.	Catalog Number	Dimensions H(mm)	W(mm)	D(mm)
3	CO 10010050	1000	1000	500
4	CO 10012050	1000	1200	500

NO.		H(mm) W(mm) D(mm)
5	SCO	Custom Dimensions

Custom sizes, cut-outs avaliable on request.

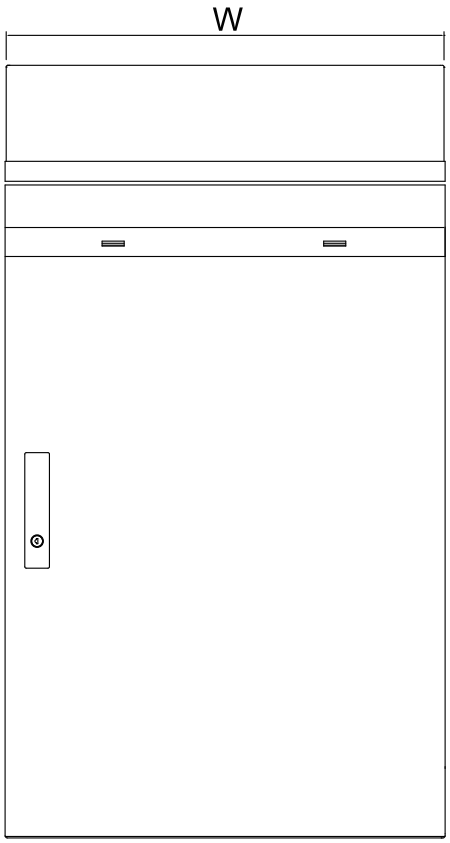

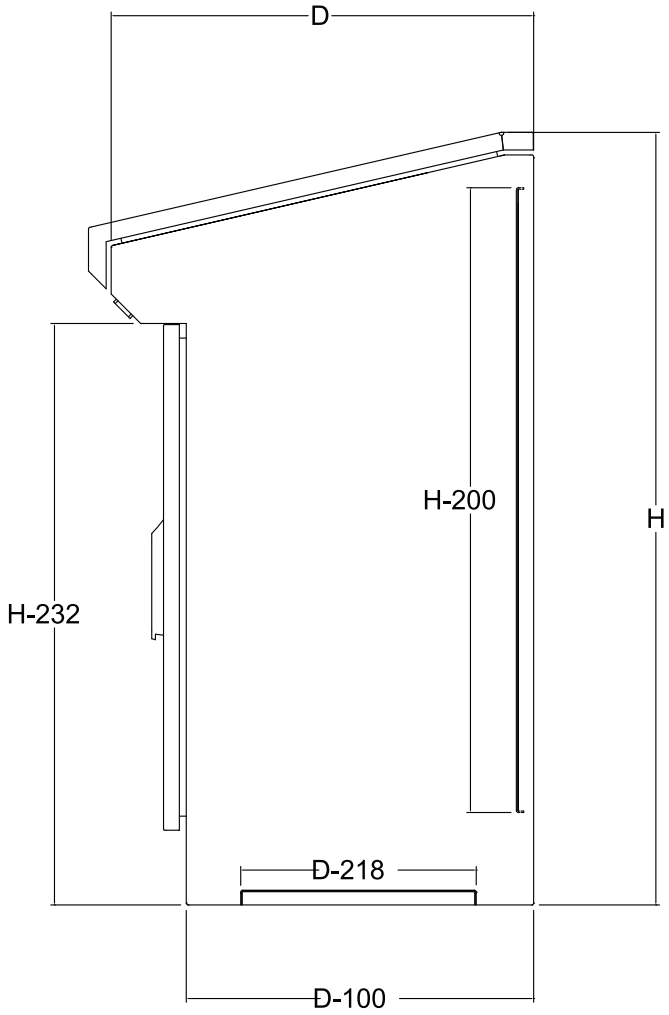

	Consoles	Upper Door	Lower Door	Gland Plate	Mounting Plate
H	H	24	H-239	15	H-200
W	W	W-3	W-3	W-90	W-50
D	D	D-3	24	D-218	10

AL Series Wall Mount Enclosures

Single-Door, IP66

Construction

- 14 gauge or 16 gauge aluminum
- 12 gauge galvanized mounting panel
- High quality automatic seamless foam-in-place gasket
- Seams continuously welded
- Door opening 120°
- Quarter-turn lock
- Three-point lock on larger enclosures
- Heavy-duty hinge
- Grounding studs on body and door

Finish

- RAL 7032 power coating, RAL 7035 and other color available
- Mounting plate in galvanized finish

Standard

AL Series, singal-door

- IP66, IEC 60529
- RoHS Compliant
- CE

Custom Enclosures

Nonstone offers high quality custom enclosures and modification services at competitive price. For information, please contact your NonStone representative.

- Other finish color and textures
- Cutouts and special holes in body and doors.
- Custom doors
- Custom body
- Special or custom accessoriest

AL Single-Door

NO.	Catalog Number	Dimensions H(mm)	W(mm)	D(mm)
1	AL 202015	200	200	150
2	AL 302015	300	200	150
3	AL 302515	300	250	150
4	AL 302520	300	250	200
5	AL 303015	300	300	150
6	AL 303020	300	300	200
7	AL 304015	300	400	150
8	AL 304020	300	400	200
9	AL 403015	400	300	150
10	AL 403020	400	300	200
11	AL 404020	400	400	200
12	AL 406020	400	600	200
13	AL 406025	400	600	250
14	AL 406030	400	600	300
15	AL 503015	500	300	150
16	AL 503020	500	300	200
17	AL 504015	500	400	150
18	AL 504020	500	400	200
19	AL 504025	500	400	250
20	AL 505020	500	500	200
21	AL 505025	500	500	250
22	AL 507020	500	700	200
23	AL 507025	500	700	250
24	AL 604020	600	400	200
25	AL 604025	600	400	250
26	AL 604030	600	400	300

NO.	Catalog Number	Dimensions H(mm)	W(mm)	D(mm)
27	AL 605020	600	500	200
28	AL 605025	600	500	250
29	AL 606020	600	600	200
30	AL 606025	600	600	250
31	AL 608030	600	800	300
32	AL 705020	700	500	200
33	AL 705025	700	500	250
34	AL 806020	800	600	200
35	AL 806025	800	600	250
36	AL 806030	800	600	300
37	AL 808025	800	800	250
38	AL 808030	800	800	300
39	AL 1006025	1000	600	250
40	AL 1006030	1000	600	300
41	AL 1006040	1000	600	400
42	AL 1008025	1000	800	250
43	AL 1008030	1000	800	300
44	AL 1206030	1200	600	300
45	AL 1206040	1200	600	400
46	AL 1208030	1200	800	300

NO.		H(mm) W(mm) D(mm)
47	SAL	Custom Dimensions

Custom sizes, cut-outs avaliable on request.

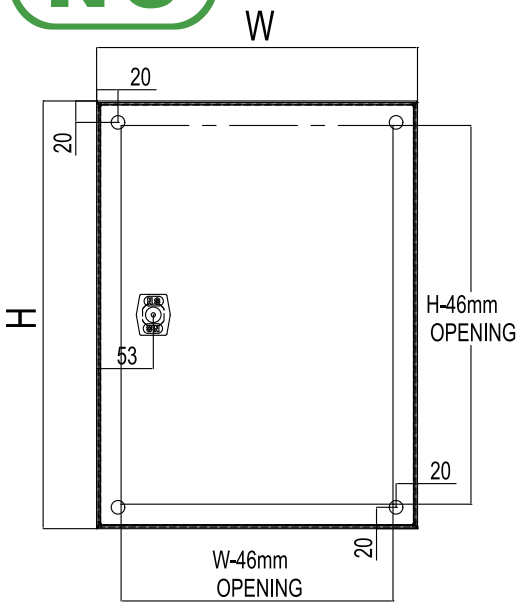
W
20
20
H
53
H-46mm
OPENING
20
20
W-46mm
OPENING

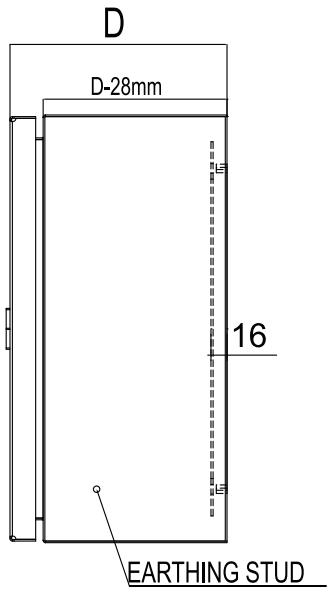
D
D-28mm
16
EARTHING STUD

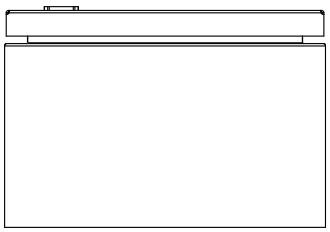

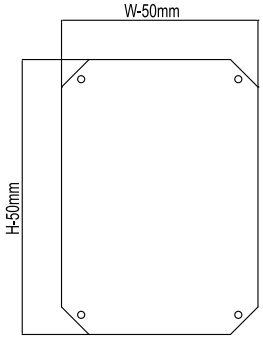
W-50mm
H-50mm

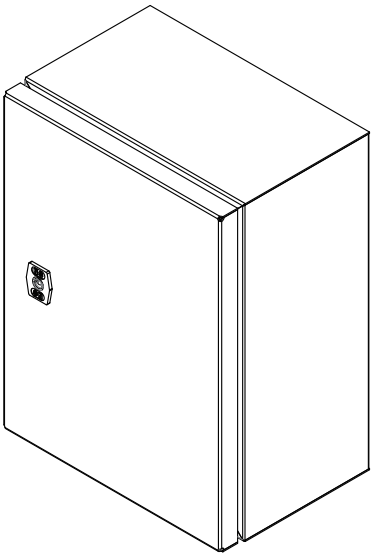

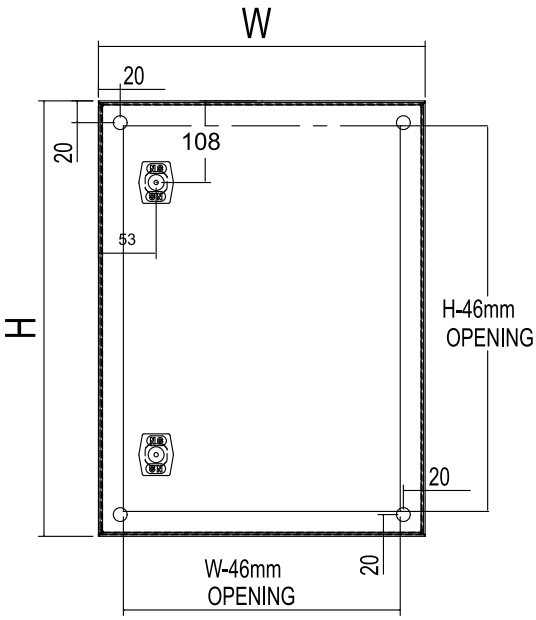
W
20
20
108
53
H
H-46mm
OPENING
20
20
W-46mm
OPENING

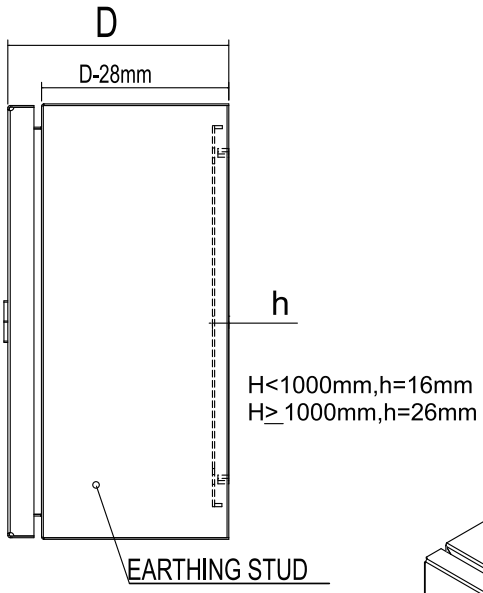
D
D-28mm
h
H<1000mm,h=16mm
H≥1000mm,h=26mm
EARTHING STUD

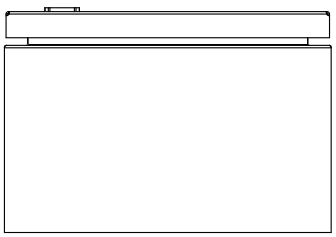

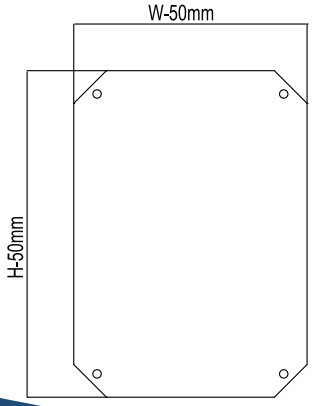
W-50mm
H-50mm

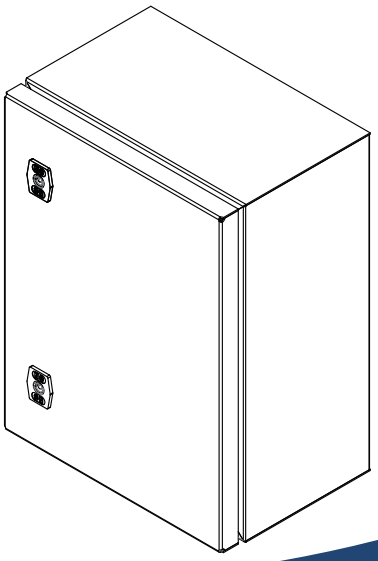

Notes:

Data subject to change without notice.

NS Series Wall Mount Enclosures

NS Single-Door, IP66

NSDD Double-Door, IP55

Construction

- 14 gauge or 16 gauge steel
- 12 gauge galvanized mounting panel
- High quality automatic seamless foam-in-place gasket
- Seams continuously welded
- All continuous welded seams are finished smooth
- Door opening 120°
- Quarter-turn lock
- Three-point lock on larger enclosures
- Heavy-duty hinge
- Grounding studs on body and door

Finish

- RAL 7032 power coating, RAL 7035 and other color available.
- Mounting plate in galvanized finish

Standard

NS Series, singal-door

- IP66, IEC 60529
- RoHS Compliant
- CE

NSDD Series, double-door

- IP55, IEC 60529
- RoHS Compliant
- CE

Custom Enclosures

Nonstone offers high quality custom enclosures
and modification services at competitive price.
For information, please contact your NonStone representative.

- Other finish color and textures
- Cutouts and special holes in body and doors.
- Custom doors
- Custom body
- Special or custom accessoriest

NS Single-Door

NO.	Catalog Number	Dimensions H(mm)	W(mm)	D(mm)
1	NS 202015	200	200	150
2	NS 302015	300	200	150
3	NS 302515	300	250	150
4	NS 302520	300	250	200
5	NS 303015	300	300	150
6	NS 303020	300	300	200
7	NS 304015	300	400	150
8	NS 304020	300	400	200
9	NS 403015	400	300	150
10	NS 403020	400	300	200
11	NS 404020	400	400	200
12	NS 406020	400	600	200
13	NS 406025	400	600	250
14	NS 406030	400	600	300
15	NS 503015	500	300	150
16	NS 503020	500	300	200
17	NS 504015	500	400	150
18	NS 504020	500	400	200
19	NS 504025	500	400	250
20	NS 505020	500	500	200
21	NS 505025	500	500	250
22	NS 507020	500	700	200
23	NS 507025	500	700	250
24	NS 604020	600	400	200
25	NS 604025	600	400	250
26	NS 604030	600	400	300

NO.	Catalog Number	Dimensions H(mm)	W(mm)	D(mm)
27	NS 605020	600	500	200
28	NS 605025	600	500	250
29	NS 606020	600	600	200
30	NS 606025	600	600	250
31	NS 608030	600	800	300
32	NS 705020	700	500	200
33	NS 705025	700	500	250
34	NS 806020	800	600	200
35	NS 806025	800	600	250
36	NS 806030	800	600	300
37	NS 808025	800	800	250
38	NS 808030	800	800	300
39	NS 1006025	1000	600	250
40	NS 1006030	1000	600	300
41	NS 1006040	1000	600	400
42	NS 1008025	1000	800	250
43	NS 1008030	1000	800	300
44	NS 1206030	1200	600	300
45	NS 1206040	1200	600	400
46	NS 1208030	1200	800	300

NO.		H(mm) W(mm) D(mm)
47	SNS	Custom Dimensions

Custom sizes, cut-outs avaliable on request.

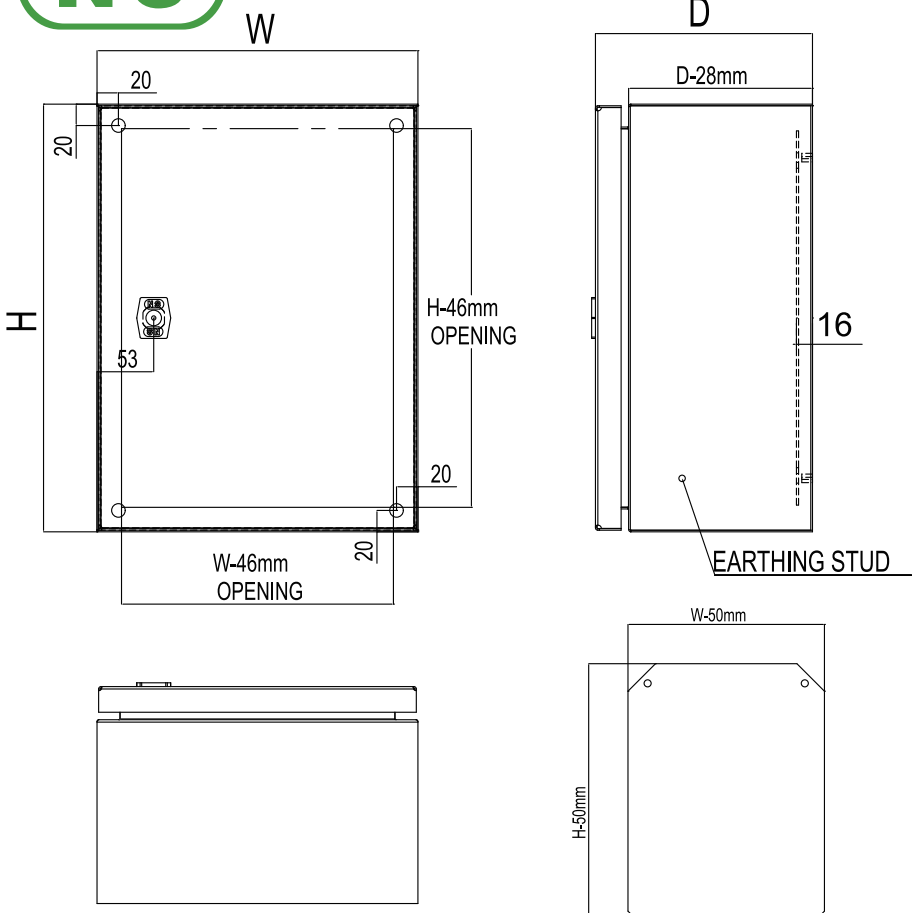
W
20
20
H
53
H-46mm
OPENING
20
20
W-46mm
OPENING
D
D-28mm
16
EARTHING STUD
W-50mm
H-50mm

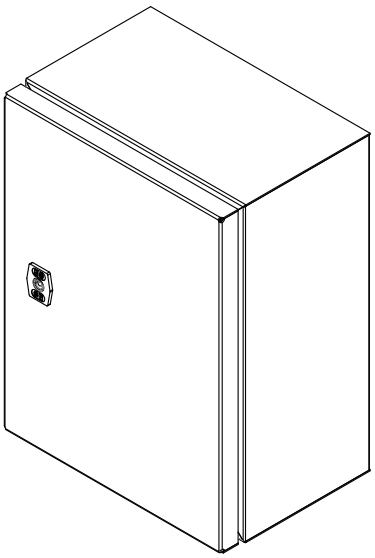

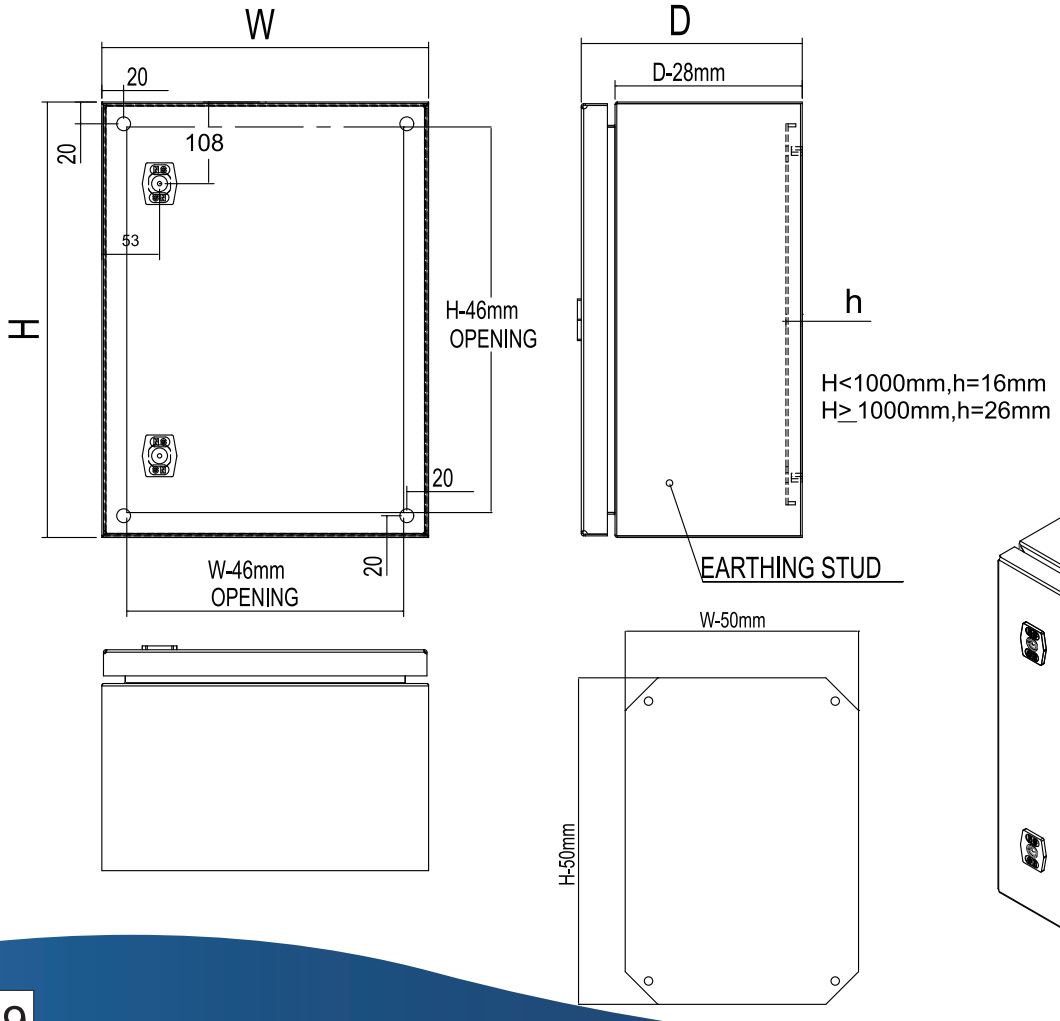
W
20
20
108
53
H
H-46mm
OPENING
20
20
W-46mm
OPENING
D
D-28mm
h
H<1000mm,h=16mm
H≥1000mm,h=26mm
EARTHING STUD
W-50mm
H-50mm

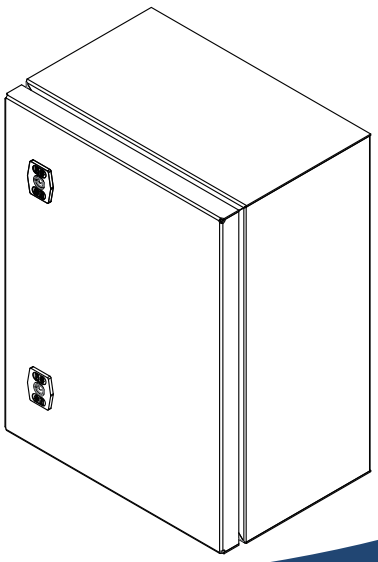

NSDD Double-Door

NO.	Catalog Number	Dimensions H(mm)	W(mm)	D(mm)
1	NSDD 608025	600	800	250
2	NSDD 608030	600	800	300
3	NSDD 8010020	800	1000	200
4	NSDD 8010025	800	1000	250
5	NSDD 8010030	800	1000	300
6	NSDD 10010025	1000	1000	250
7	NSDD 10010030	1000	1000	300
8	NSDD 12010025	1200	1000	250
9	NSDD 12010030	1200	1000	300
10	NSDD 14012040	1400	1200	400
11	NSDD 14012050	1400	1200	500

NO.		H(mm) W(mm) D(mm)
12	SNSDD Custom Dimensions	

Special/Custom sizes, cut-outs avaliable on request.

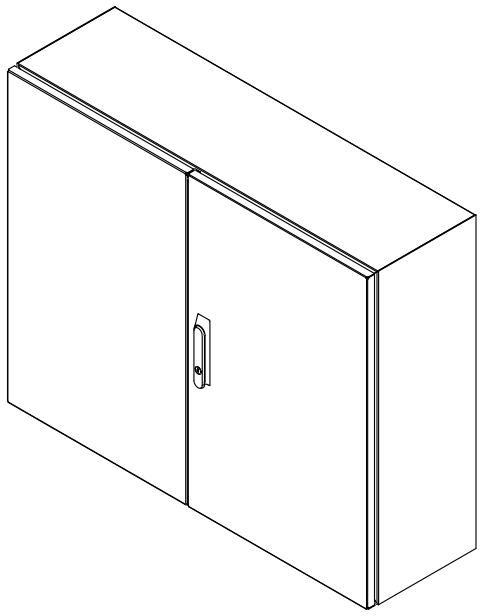

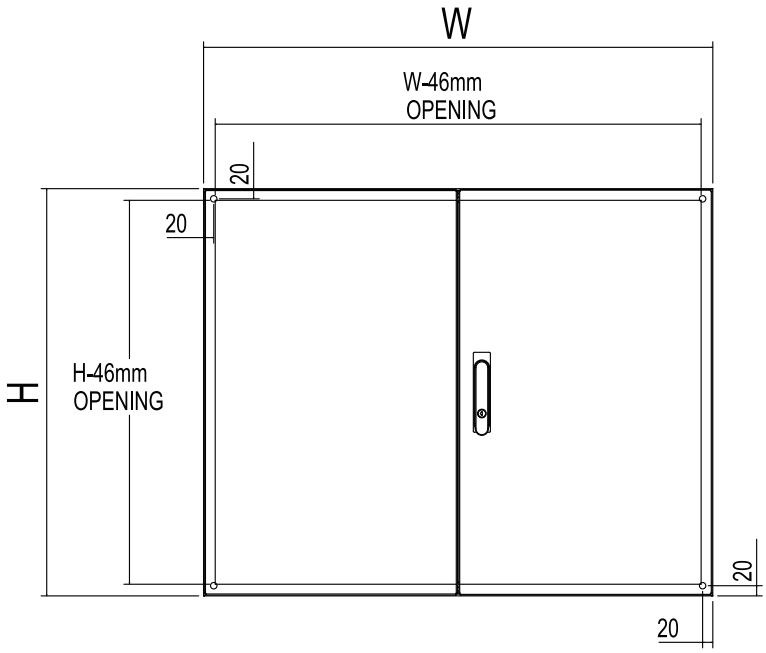

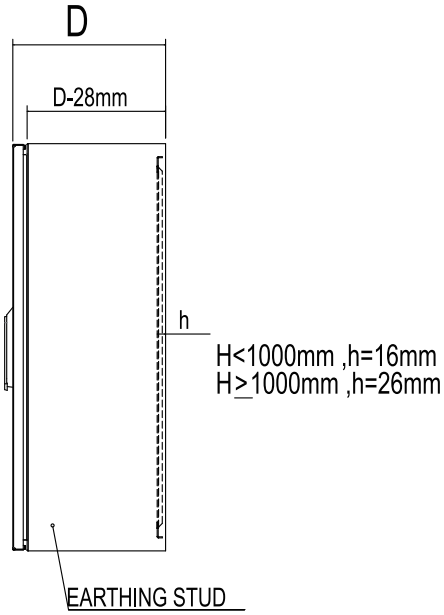

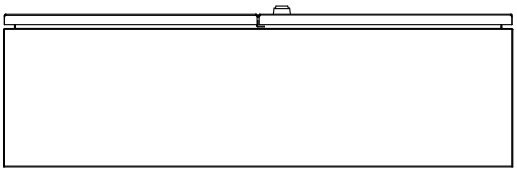

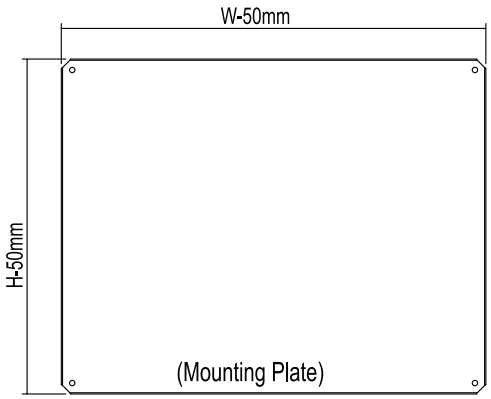

NSS Series Stainless Steel Enclosures

NSS Single-Door, IP66

Following options are available for stainless Steel enclosures(picture above):

1.Stiffener 2.Interior white painting
3.SUS 304 lock 4. SUS 316 lock

RoHS COMPLIANT

CE

Construction

- 14 gauge or 16 gauge stainless steel
- 12 gauge galvanized mounting panel
- High quality automatic seamless foam-in-place gasket
- Seams continuously welded
- Door opening 120°
- Quarter-turn lock
- Three-point lock on larger enclosures
- Heavy-duty hinge
- Grounding studs on body and door

Finish

- Cover and body have brushed smooth.
- Interior of enclosure and mounting panel are painted white.

Industry Standards

NSS Series, singal-door

- IP66, IEC 60529
- Comply with NEMA 4X
- RoHS Compliant
- CE

NSDD Series, double-door

- IP55, IEC 60529
- Comply with NEMA 12
- RoHS Compliant
- CE

Custom Enclosures

Nonstone offers high quality custom enclosures and modification services at competitive price.
For information, please contact your NonStone representative.

- Other finish color and textures
- Cutouts and special holes in body and doors.
- Custom doors
- Custom body
- Special or custom accessoriest

NSS Single-Door

NO.	Catalog Number	Dimensions H(mm)	W(mm)	D(mm)
1	NSS 202015	200	200	150
2	NSS 302015	300	200	150
3	NSS 302515	300	250	150
4	NSS 302520	300	250	200
5	NSS 303015	300	300	150
6	NSS 303020	300	300	200
7	NSS 304015	300	400	150
8	NSS 304020	300	400	200
9	NSS 403015	400	300	150
10	NSS 403020	400	300	200
11	NSS 404020	400	400	200
12	NSS 406020	400	600	200
13	NSS 406025	400	600	250
14	NSS 406030	400	600	300
15	NSS 503015	500	300	150
16	NSS 503020	500	300	200
17	NSS 504015	500	400	150
18	NSS 504020	500	400	200
19	NSS 504025	500	400	250
20	NSS 505020	500	500	200
21	NSS 505025	500	500	250
22	NSS 507020	500	700	200
23	NSS 507025	500	700	250
24	NSS 604020	600	400	200
25	NSS 604025	600	400	250
26	NSS 604030	600	400	300

NO.	Catalog Number	Dimensions H(mm)	W(mm)	D(mm)
27	NSS 605020	600	500	200
28	NSS 605025	600	500	250
29	NSS 606020	600	600	200
30	NSS 606025	600	600	250
31	NSS 606030	600	600	300
32	NSS 705020	700	500	200
33	NSS 705025	700	500	250
34	NSS 806020	800	600	200
35	NSS 806025	800	600	250
36	NSS 806030	800	600	300
37	NSS 808025	800	800	250
38	NSS 808030	800	800	300
39	NSS 1006025	1000	600	250
40	NSS 1006030	1000	600	300
41	NSS 1006040	1000	600	400
42	NSS 1008025	1000	800	250
43	NSS 1008030	1000	800	300
44	NSS 1206030	1200	600	300
45	NSS 1206040	1200	600	400
46	NSS 1208030	1200	800	300

NO.		H(mm) W(mm) D(mm)
47	SNSS	Custom Dimensions

Special/Custom sizes, cut-outs avaliable on request.

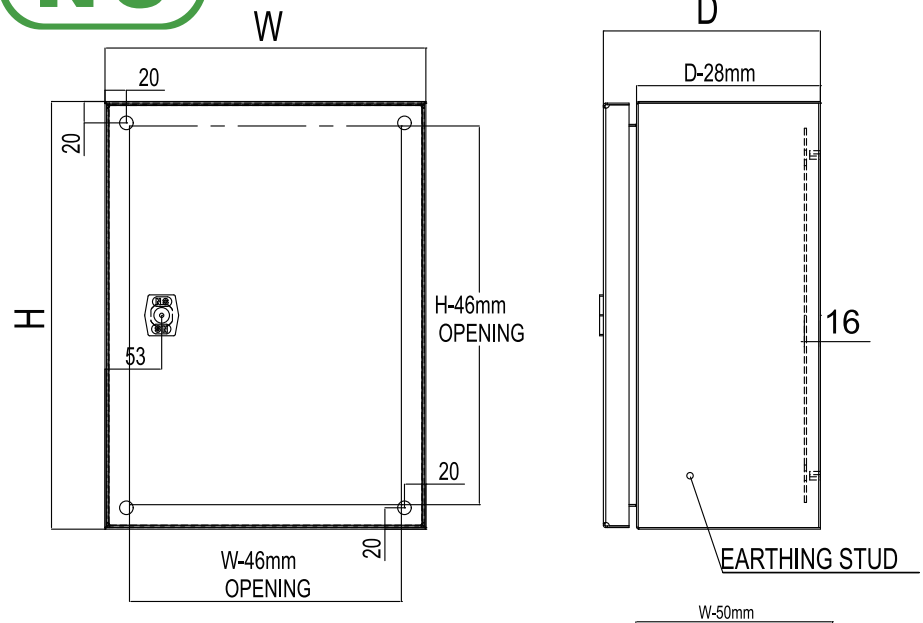
W
20
20
H
53
H-46mm
OPENING
20
W-46mm
OPENING
20
D
D-28mm
16
EARTHING STUD

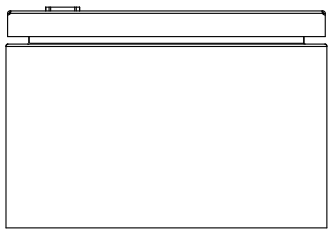

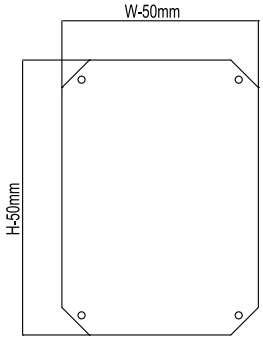
W-50mm
H-50mm

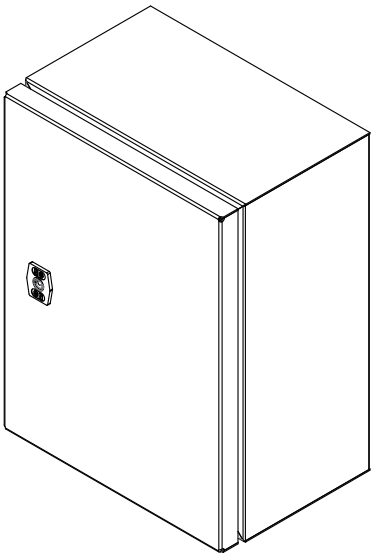

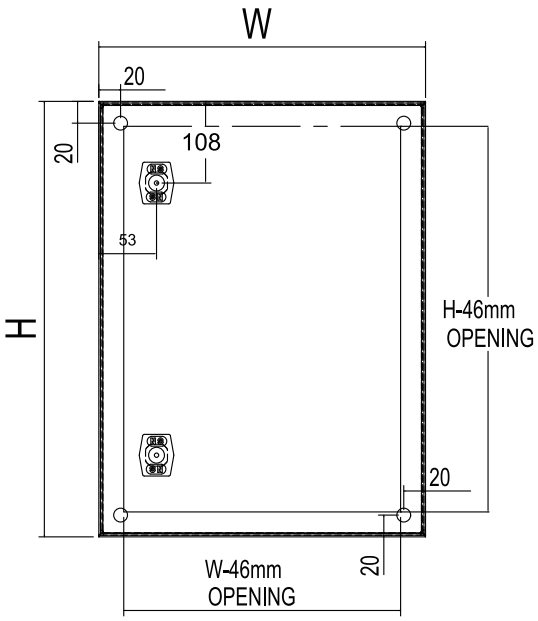
W
20
20
108
53
H
H-46mm
OPENING
20
W-46mm
OPENING
20

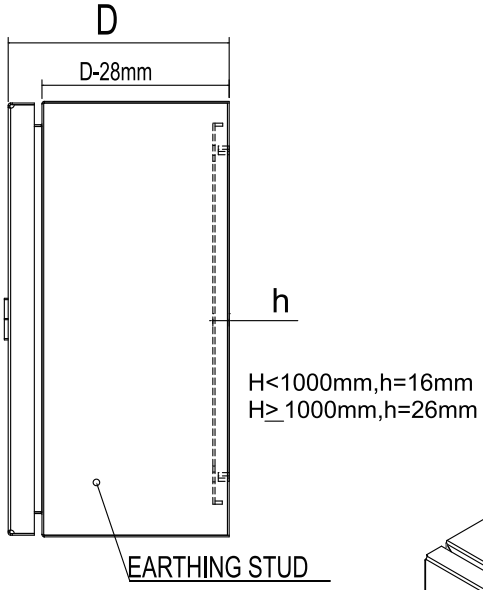
D
D-28mm
h
H<1000mm,h=16mm
H≥1000mm,h=26mm
EARTHING STUD

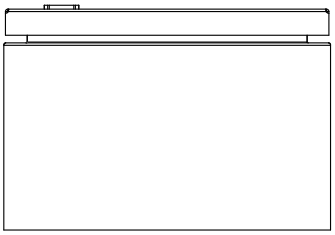

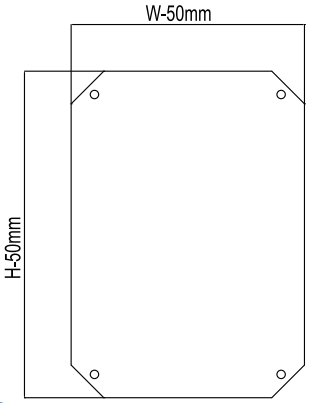
W-50mm
H-50mm

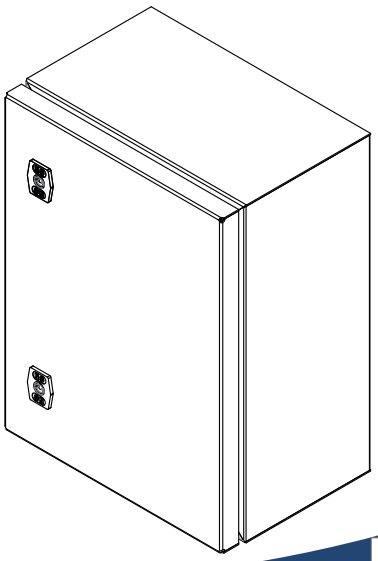

NSSDD Double-Door

NO.	Catalog Number	Dimensions H(mm)	W(mm)	D(mm)
1	NSSDD 608025	600	800	250
2	NSSDD 608030	600	800	300
3	NSSDD 8010020	800	1000	200
4	NSSDD 8010025	800	1000	250
5	NSSDD 8010030	800	1000	300
6	NSSDD 10010025	1000	1000	250
7	NSSDD 10010030	1000	1000	300
8	NSSDD 12010025	1200	1000	250
9	NSSDD 12010030	1200	1000	300
10	NSSDD 14012040	1400	1200	400
11	NSSDD 14012050	1400	1200	500

NO.		H(mm) W(mm) D(mm)
12	SNSSDD	Custom Dimensions

Custom sizes, cut-outs avaliable on request.

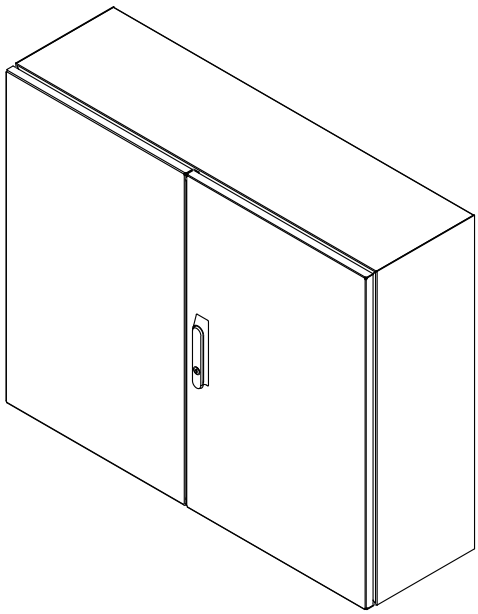

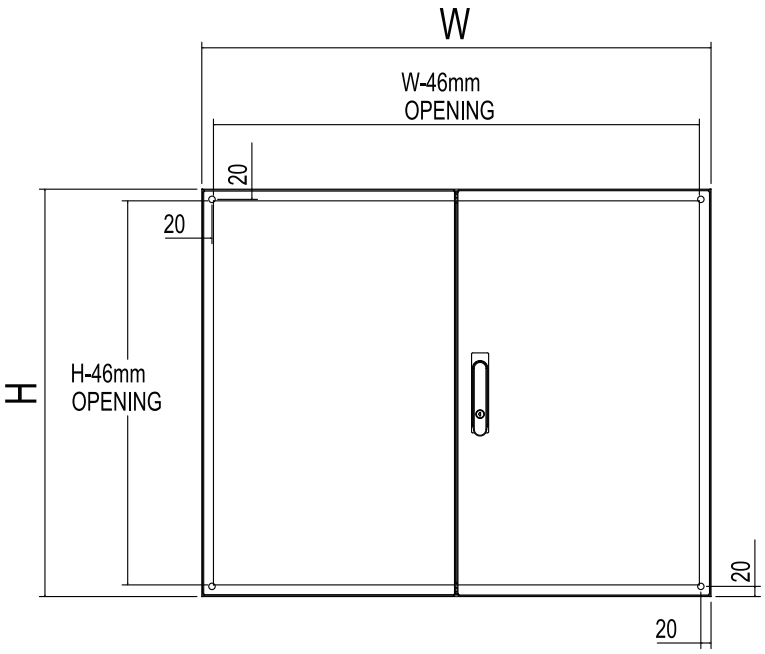

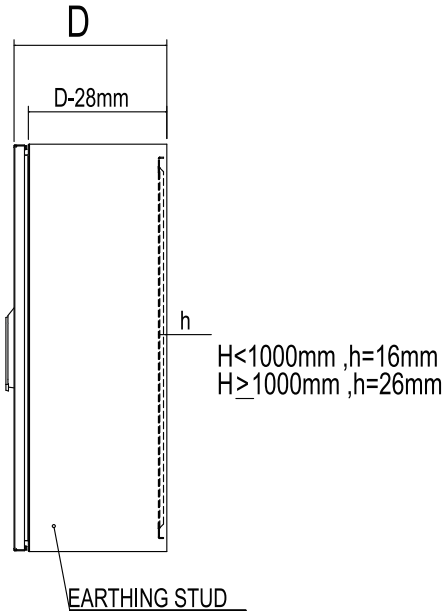

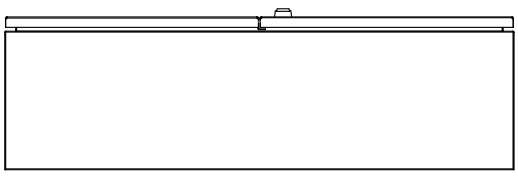

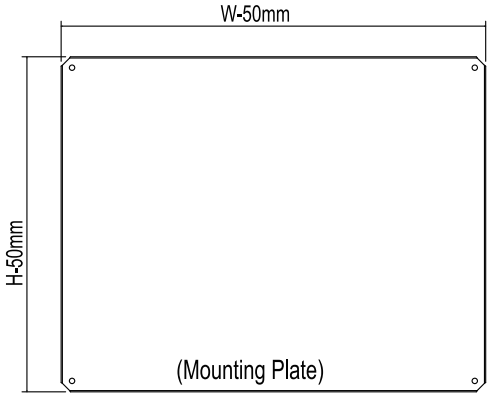

NSW Series Window Enclosures

IP65, CE

NSW

NSWI

Construction

- 5mm tempered glass
- 14 gauge or 16 gauge steel
- 12 gauge galvanized mounting panel
- High quality automatic seamless foam-in-place gasket
- Seams continuously welded
- Door opening 120°
- Quarter-turn lock
- Three-point lock on larger enclosures
- Heavy-duty hinge
- Grounding studs on body and door

Finish

- RAL 7032 power coating, RAL 7035 and other color available
- Mounting plate in galvanized finish

Industry Standards

NS Series, singal-door

- IP66, IEC 60529
- RoHS Compliant
- CE

Custom Enclosures

Nonstone offers high quality custom enclosures and modification services at competitive price. For information, please contact your NonStone representative.

- Other finish color and textures
- Cutouts and special holes in body and doors.
- Custom doors
- Custom body
- Special or custom accessoriest

NO.	Catalog Number	Dimensions H(mm)	W(mm)	D(mm)
1	NSW 303020	300	300	200
2	NSW 304015	300	400	150
3	NSW 304020	300	400	200
4	NSW 403015	400	300	150
5	NSW 403020	400	300	200
6	NSW 404020	400	400	200
7	NSW 406020	400	600	200
8	NSW 406025	400	600	250
9	NSW 406030	400	600	300
10	NSW 503015	500	300	150
11	NSW 503020	500	300	200
12	NSW 504015	500	400	150
13	NSW 504020	500	400	200
14	NSW 504025	500	400	250
15	NSW 505020	500	500	200
16	NSW 505025	500	500	250
17	NSW 507020	500	700	200
18	NSW 507025	500	700	250
19	NSW 604020	600	400	200
20	NSW 604025	600	400	250
21	NSW 604030	600	400	300
22	NSW 605020	600	500	200
23	NSW 605025	600	500	250
24	NSW 606020	600	600	200
25	NSW 606025	600	600	250
26	NSW 606030	600	600	300
27	NSW 608025	600	800	250
28	NSW 608030	600	800	300
29	NSW 705020	700	500	200
30	NSW 705025	700	500	250
31	NSW 806020	800	600	200
32	NSW 806025	800	600	250
33	NSW 806030	800	600	300
34	NSW 808025	800	800	250
35	NSW 808030	800	800	250
36	NSW 8010020	800	1000	200
37	NSW 8010030	800	1000	300
38	NSW 1006025	1000	600	250
39	NSW 1006030	1000	600	300
40	NSW 1006040	1000	600	400
41	NSW 1008025	1000	800	250
42	NSW 1008030	1000	800	300
43	NSW 10010030	1000	1000	300
44	NSW 1206030	1200	600	300
45	NSW 1206040	1200	600	400
46	NSW 1208030	1200	800	300
47	NSW 12010025	1200	1000	250
48	NSW 12010030	1200	1000	300

NO.		H(mm) W(mm) D(mm)
49	SNSW	Custom Dimensions

Special/Custom sizes, cut-outs avaliable on request.

Note:
1. All item above without inner door
2. Add suffix "I" for Inner Door
3. Use "NSWDD" for double-door

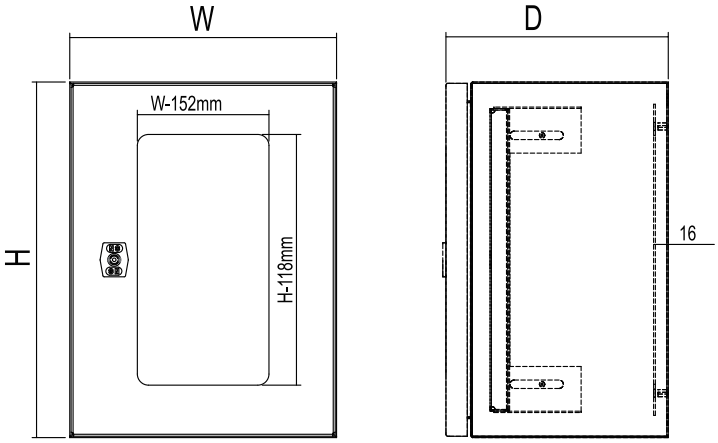

Dimensios	H	W	D
Door	H-3	W-3	24
Window	H-118	W-152	
Glass	H-98	W-132	5
Inner Door	H-60	W-64	20
Mounting Plate	H-50	W-50	10

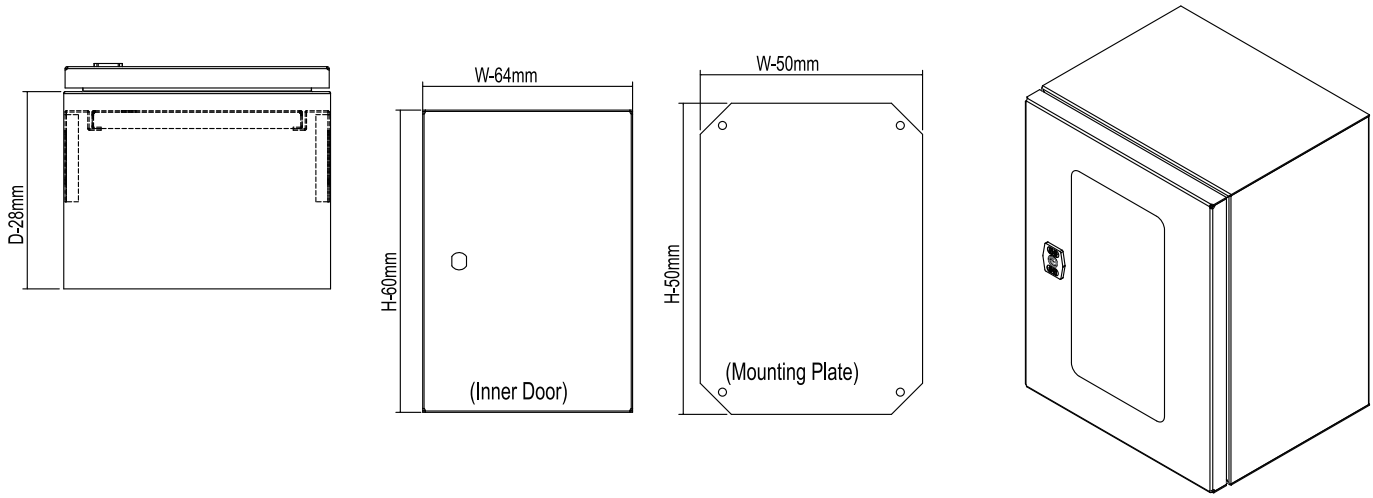

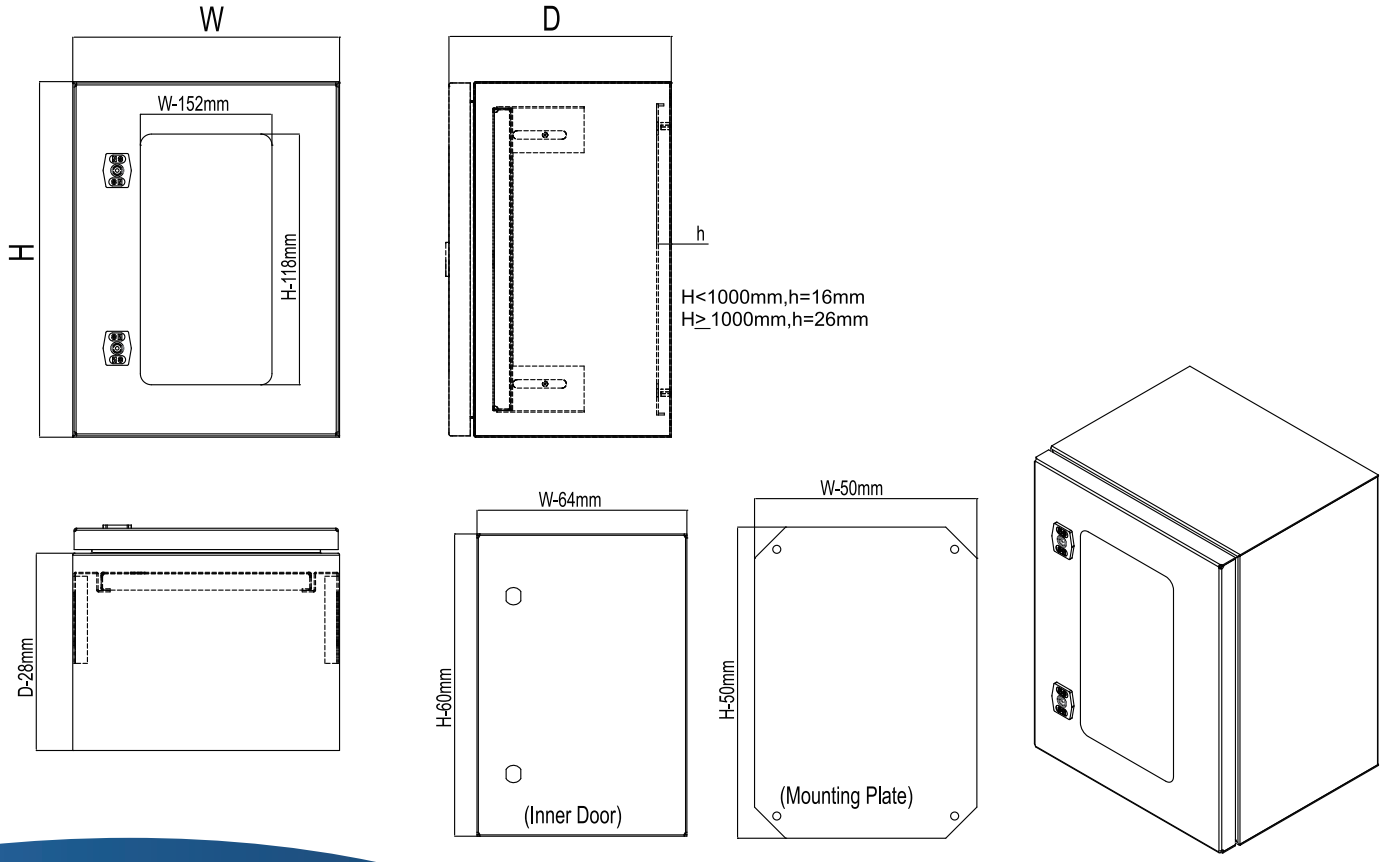

ES Series

Wall Mount Enclosure

ES Series Wall Mount Enclosure with Gland Plate

ES Single-Door, IP66

ESDD Double-Door, IP55

Construction

- Gland plate with sealing gasket
- 14 gauge or 16 gauge steel
- 12 gauge galvanized mounting panel
- High quality automatic seamless foam-in-place gasket
- Seams continuously welded
- Door opening 120°
- Quarter-turn lock
- Three-point lock on larger enclosures
- Heavy-duty hinge
- Grounding studs on body and door

Finish

- RAL 7032 power coating, RAL7035 and other color available.
- Mounting plate in galvanized finish.

Industry Standards

ES Series, singal-door

- IP66, IEC 60529
- RoHS Compliant
- CE

ESDD Series, double-door

- IP55, IEC 60529
- RoHS Compliant
- CE

Custom Enclosures

Nonstone offers high quality custom enclosures and modification services at competitive price. For information, please contact your NonStone representative.

- Other finish color and textures
- Cutouts and special holes in body and doors.
- Custom doors
- Custom body
- Special or custom accessoriest

ES Single-Door

NO.	Catalog Number	Dimensions H(mm)	W(mm)	D(mm)
1	ES 202015	200	200	150
2	ES 302015	300	200	150
3	ES 302515	300	250	150
4	ES 302520	300	250	200
5	ES 303015	300	300	150
6	ES 303020	300	300	200
7	ES 304015	300	400	150
8	ES 304020	300	400	200
9	ES 403015	400	300	150
10	ES 403020	400	300	200
11	ES 404020	400	400	200
12	ES 406020	400	600	200
13	ES 406025	400	600	250
14	ES 406030	400	600	300
15	ES 503015	500	300	150
16	ES 503020	500	300	200
17	ES 504015	500	400	150
18	ES 504020	500	400	200
19	ES 504025	500	400	250
20	ES 505020	500	500	200
21	ES 505025	500	500	250
22	ES 507020	500	700	200
23	ES 507025	500	700	250
24	ES 604020	600	400	200
25	ES 604025	600	400	250
26	ES 604030	600	400	300

NO.	Catalog Number	Dimensions H(mm)	W(mm)	D(mm)
27	ES 605020	600	500	200
28	ES 605025	600	500	250
29	ES 606020	600	600	200
30	ES 606025	600	600	250
31	ES 606030	600	600	300
32	ES 705020	700	500	200
33	ES 705025	700	500	250
34	ES 806020	800	600	200
35	ES 806025	800	600	250
36	ES 806030	800	600	300
37	ES 808025	800	800	250
38	ES 808030	800	800	300
39	ES 1006025	1000	600	250
40	ES 1006030	1000	600	300
41	ES 1006040	1000	600	400
42	ES 1008025	1000	800	250
43	ES 1008030	1000	800	300
44	ES 1206030	1200	600	300
45	ES 1206040	1200	600	400
46	ES 1208030	1200	800	300

NO.		H(mm) W(mm) D(mm)
47	SES	Custom Dimensions

Special/Custom sizes, cut-outs avaliable on request.

Gland Plate Dimensions

	A(mm)	B(mm)
A	130	60
B	230	60
C	330	120
D	530	120

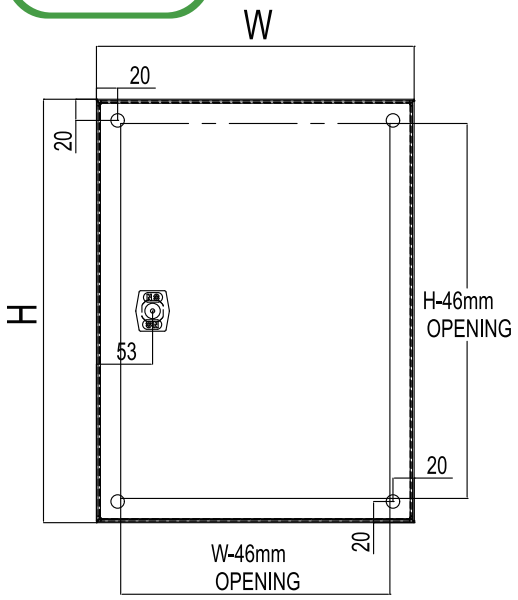

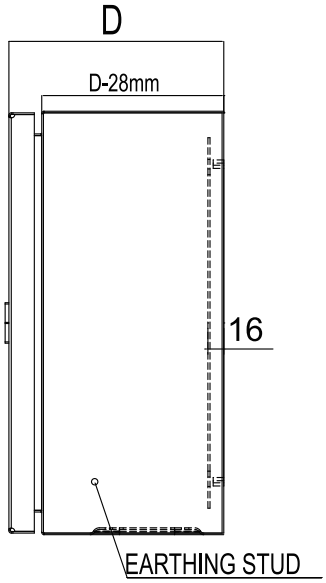

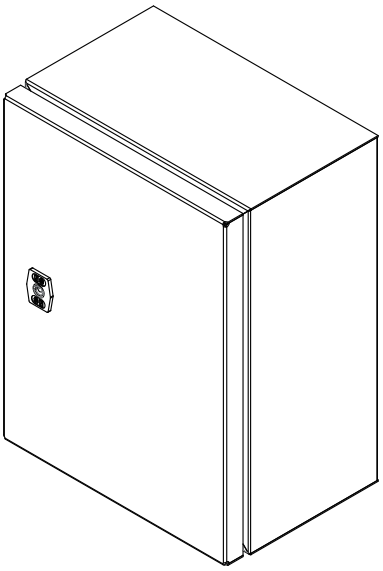

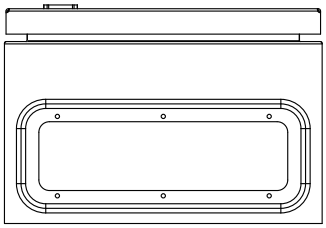

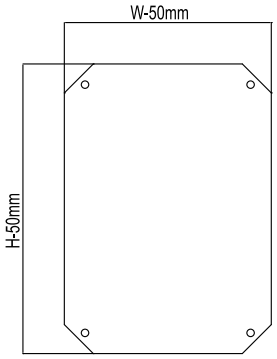

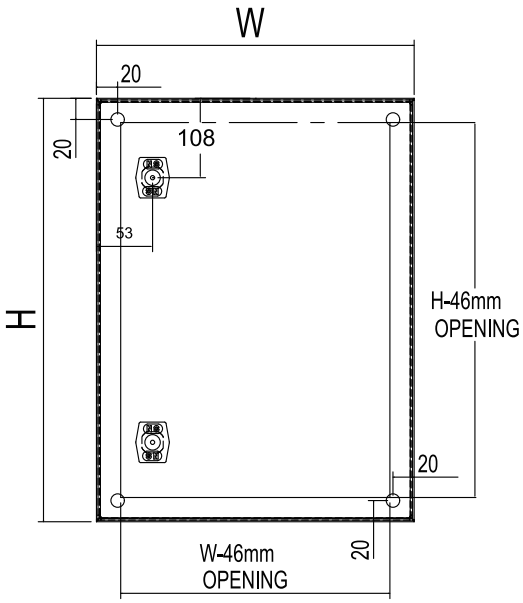

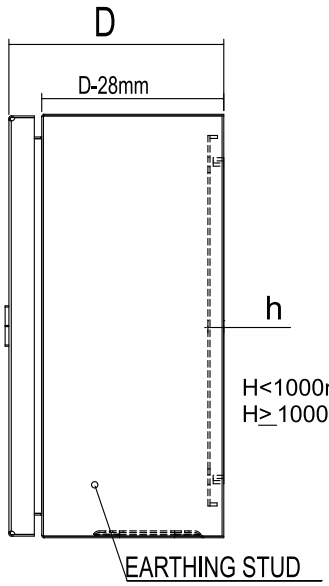

H<1000mm,h=16mm
H≥1000mm,h=26mm

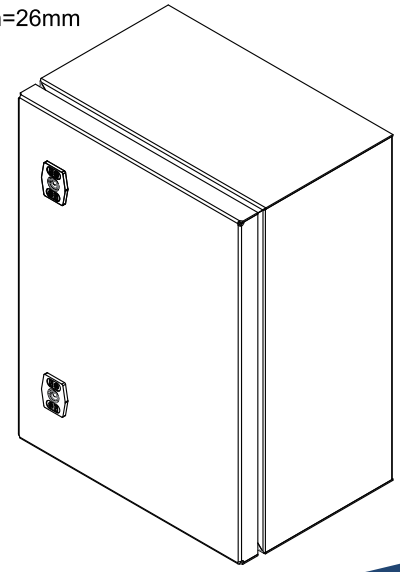

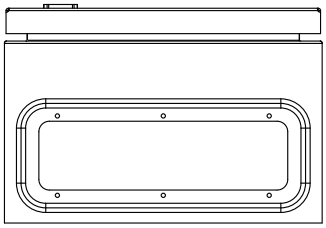

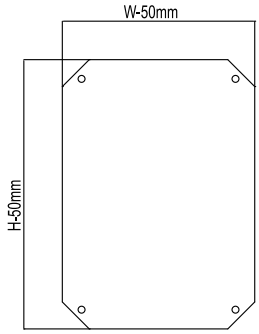

ES Double-Door

NO.	Catalog Number	Dimensions H(mm)	W(mm)	D(mm)
1	ESDD 608025	600	800	250
2	ESDD 608030	600	800	300
3	ESDD 8010020	800	1000	200
4	ESDD 8010025	800	1000	250
5	ESDD 8010030	800	1000	300
6	ESDD 10010025	1000	1000	250
7	ESDD 10010030	1000	1000	300
8	ESDD 12010025	1200	1000	250
9	ESDD 12010030	1200	1000	300
10	ESDD 14012040	1400	1200	400
11	ESDD 14012050	1400	1200	500

Gland Plate Dimensions

	A(mm)	B(mm)
A	130	60
B	230	60
C	330	120
D	530	120

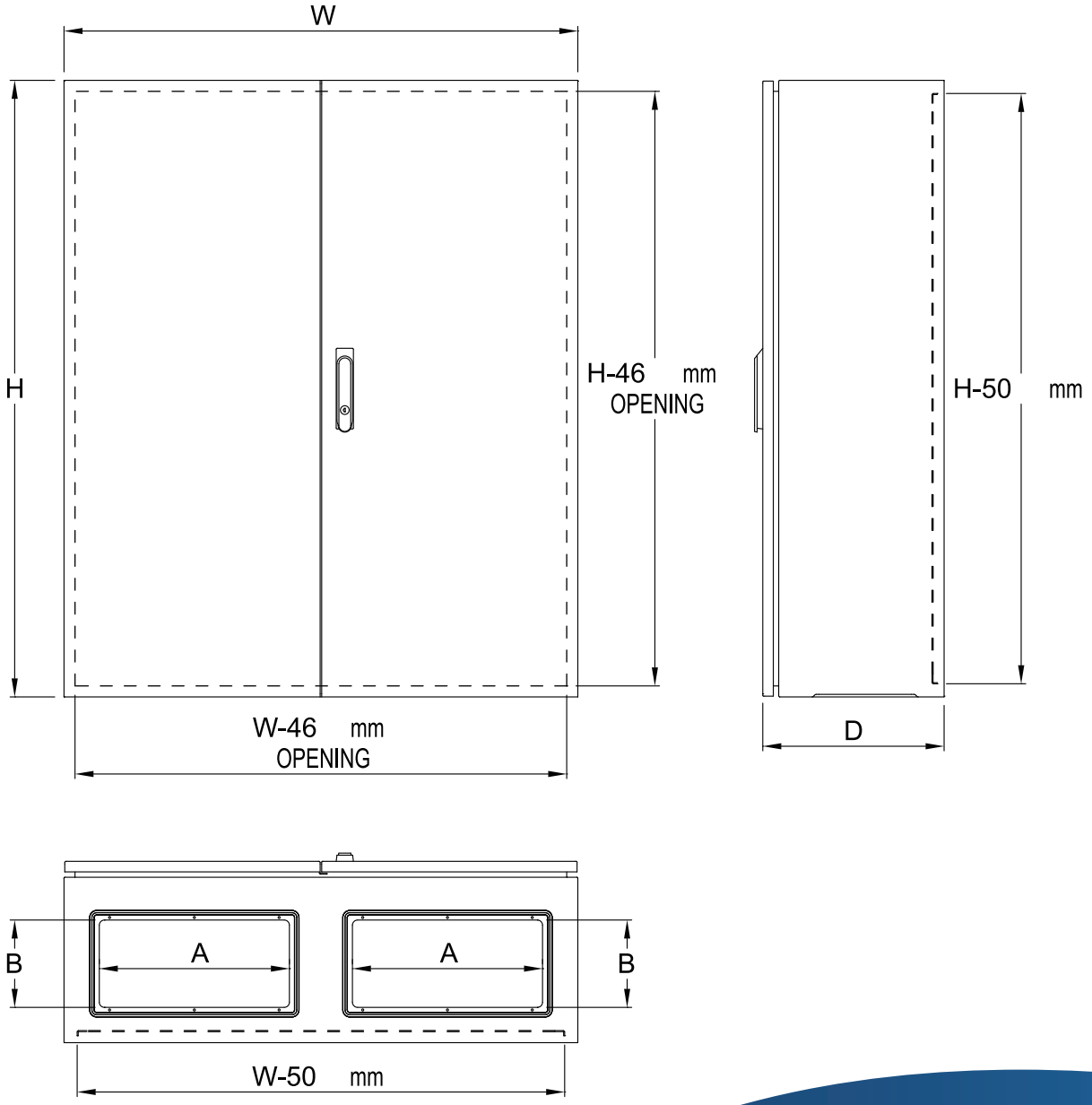

Data subject to change without notice.

ESS Series Stainless Steel Enclosure with Gland Plate

ESS Single-Door, IP66

Construction

- Gland plate with sealing gasket
- 14 gauge or 16 gauge stainless steel
- 12 gauge galvanized mounting panel
- High quality automatic seamless foam-in-place gasket
- Seams continuously welded
- Door opening 120°
- Quarter-turn lock
- Three-point lock on larger enclosures
- Heavy-duty hinge
- Grounding studs on body and door

Finish

- Cover and body have brushed smooth.
- Interior of enclosure and mounting panel are painted white.

Industry Standards

ESS Series, singal-door

- IP66, IEC 60529
- Comply with NEMA 4X
- RoHS Compliant
- CE

ESSDD Series, double-door

- IP55, IEC 60529
- Comply with NEMA 12
- RoHS Compliant
- CE

Custom Enclosures

Nonstone offers high quality custom enclosures
and modification services at competitive price.
For information, please contact your NonStone representative.

- Other finish color and textures
- Cutouts and special holes in body and doors.
- Custom doors
- Custom body
- Special or custom accessoriest

ESS Single-Door

NO.		Catalog Number	Dimensions H(mm)	W(mm)	D(mm)
1	ESS	202015	200	200	150
2	ESS	302015	300	200	150
3	ESS	302515	300	250	150
4	ESS	302520	300	250	200
5	ESS	303015	300	300	150
6	ESS	303020	300	300	200
7	ESS	304015	300	400	150
8	ESS	304020	300	400	200
9	ESS	403015	400	300	150
10	ESS	403020	400	300	200
11	ESS	404020	400	400	200
12	ESS	406020	400	600	200
13	ESS	406025	400	600	250
14	ESS	406030	400	600	300
15	ESS	504015	500	400	150
16	ESS	504020	500	400	200
17	ESS	504025	500	400	250
18	ESS	505020	500	500	200
19	ESS	505025	500	500	250
20	ESS	507020	500	700	200
21	ESS	507025	500	700	250
22	ESS	604020	600	400	200

NO.		Catalog Number	Dimensions H(mm)	W(mm)	D(mm)
23	ESS	604025	600	400	250
24	ESS	604030	600	400	300
25	ESS	605015	600	500	150
26	ESS	605020	600	500	200
27	ESS	605025	600	500	250
28	ESS	606020	600	600	200
29	ESS	606025	600	600	250
30	ESS	606030	600	600	300
31	ESS	705020	700	500	200
32	ESS	705025	700	500	250
33	ESS	806025	800	600	250
34	ESS	806030	800	600	300
35	ESS	808030	800	800	300
36	ESS	1006025	1000	600	250
37	ESS	1006030	1000	600	300
38	ESS	1006040	1000	600	400
39	ESS	1008025	1000	800	250
40	ESS	1008030	1000	800	300
41	ESS	1206030	1200	600	300
42	ESS	1208025	1200	800	250
43	ESS	1208030	1200	800	300
44	ESS	1208040	1200	800	400
45	ESS	14012040	1400	1200	400

Gland Plate Dimensions

	A(mm)	B(mm)
A	130	60
B	230	60
C	330	120
D	530	120

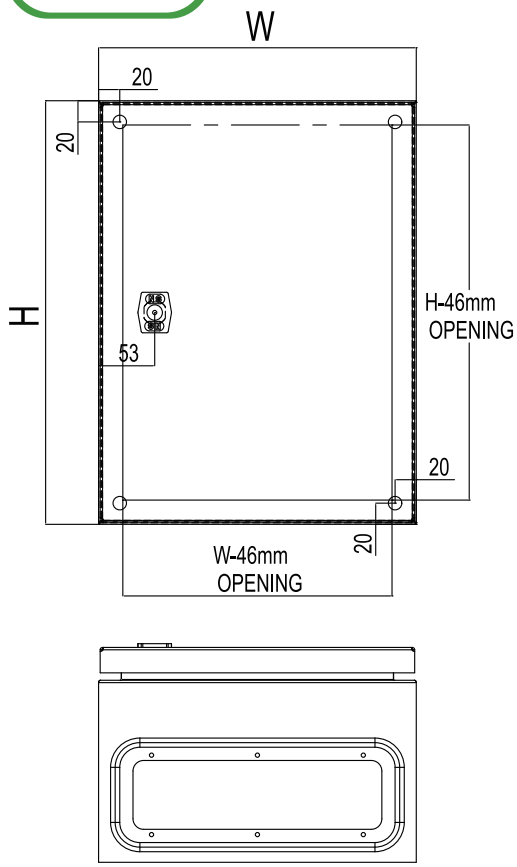
W
20
20
H
53
H-46mm
OPENING
20
20
W-46mm
OPENING

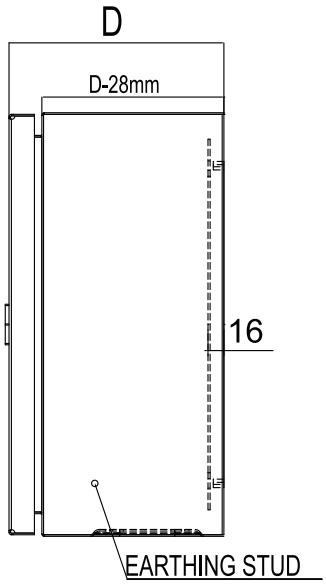
D
D-28mm
16
EARTHING STUD

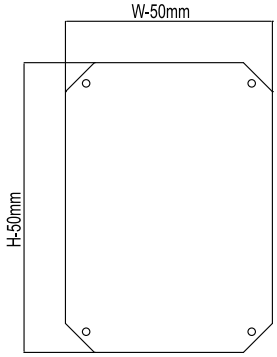
W-50mm
H-50mm

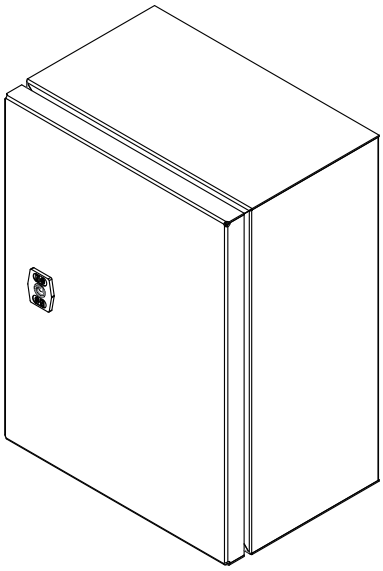

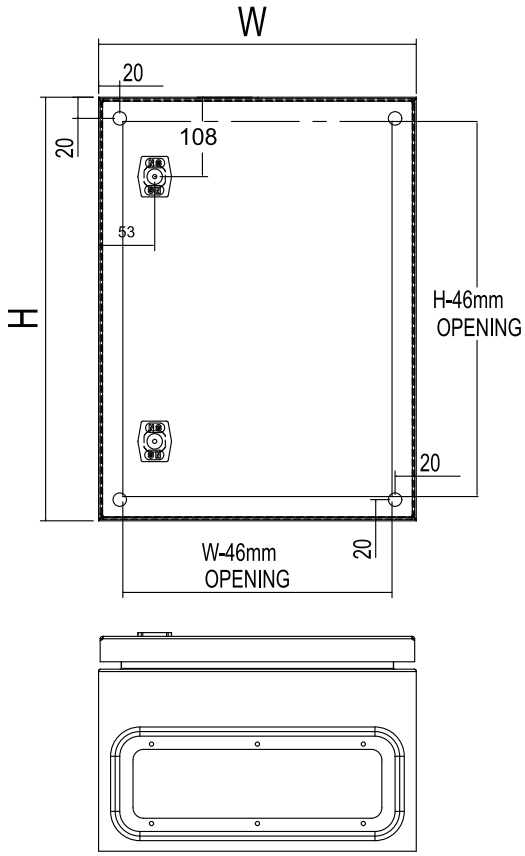
W
20
20
108
53
H
H-46mm
OPENING
20
20
W-46mm
OPENING

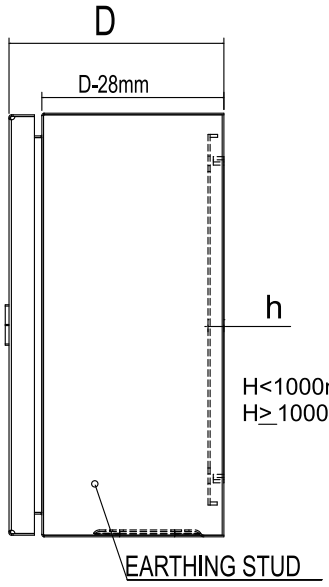
D
D-28mm
h
H<1000mm,h=16mm
H≥1000mm,h=26mm
EARTHING STUD

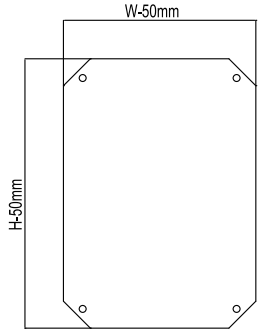
W-50mm
H-50mm

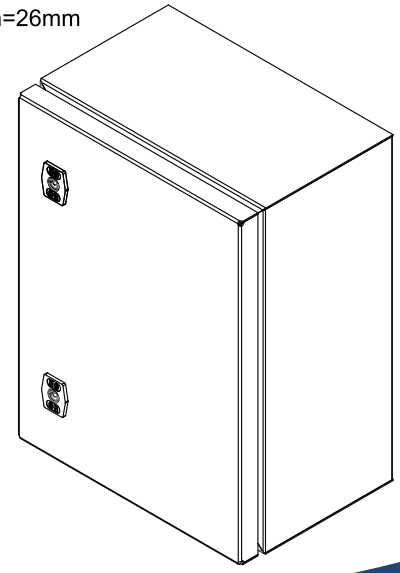

ESSDD Double-Door

NO.	Catalog Number	Dimensions H(mm)	W(mm)	D(mm)
1	ESSDD 608025	600	800	250
2	ESSDD 608030	600	800	300
3	ESSDD 8010020	800	1000	200
4	ESSDD 8010025	800	1000	250
5	ESSDD 8010030	800	1000	300
6	ESSDD 10010025	1000	1000	250
7	ESSDD 10010030	1000	1000	300
8	ESSDD 12010025	1200	1000	250
9	ESSDD 12010030	1200	1000	300
10	ESSDD 14012040	1400	1200	400
11	ESSDD 14012050	1400	1200	500

Gland Plate Dimensions

	A(mm)	B(mm)
A	130	60
B	230	60
C	330	120
D	530	120

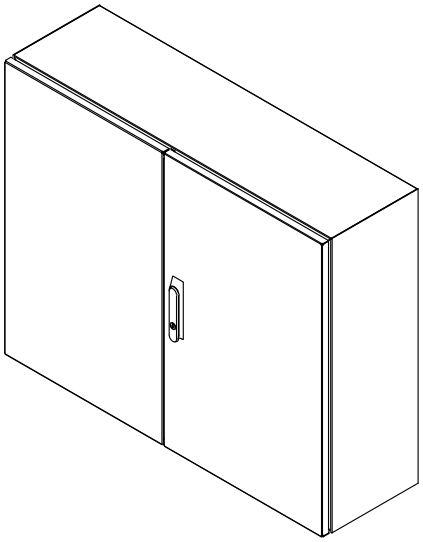

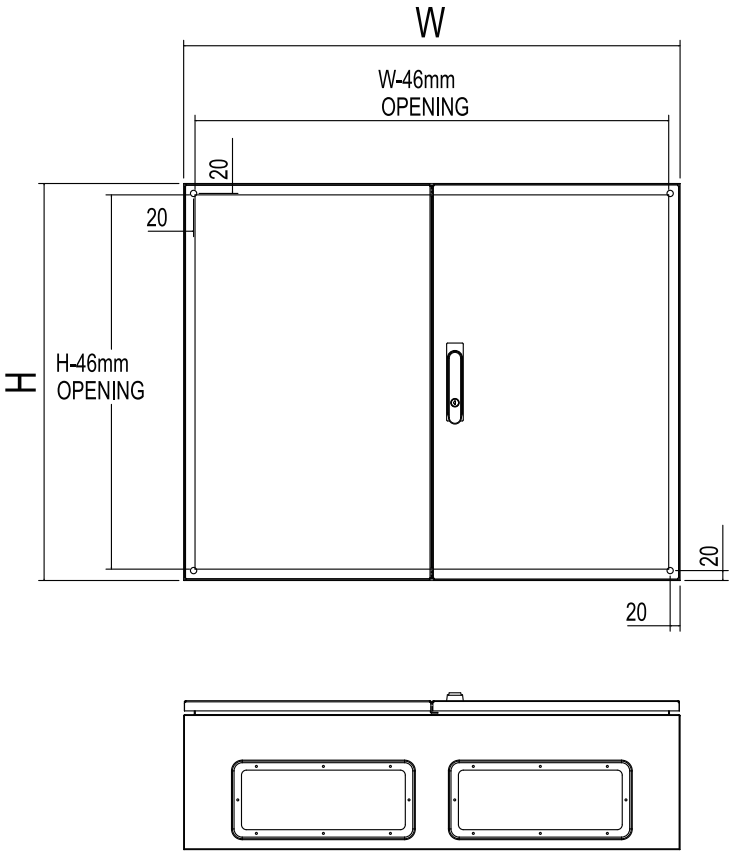

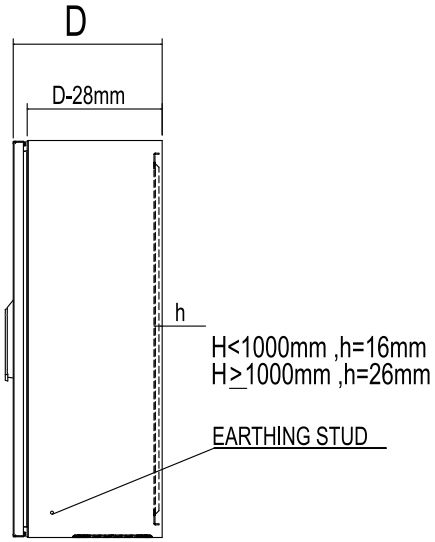

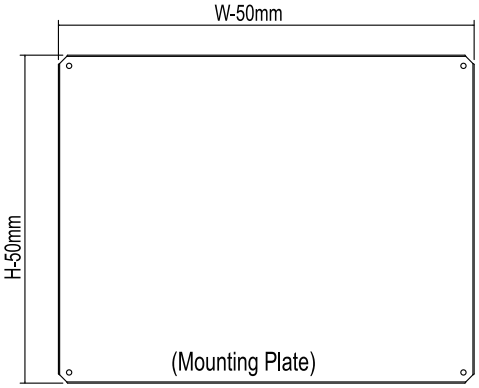

FT Series Wall Mount Enclosures

Single-Door, IP66, RAL7035 Outdoor

Construction

- Door: 1.5mm - 1.8mm Mild Steel
- Body: 1.2mm Mild Steel
- 2mm galvanized steel mounting panel
- High quality automatic seamless foam-in-place gasket
- Seams continuously welded
- All continuous welded seams are finished smooth
- Door opening 120°
- Quarter-turn lock
- Heavy-duty hinge
- Grounding studs on body and door

Finish

- RAL 7035 outdoor power coating
- Mounting plate in galvanized finish

Standards

FT Series, singal-door

- IP66, IEC 60529
- RoHS Compliant
- REACH Compliant

CE

RoHS COMPLIANT CE

Custom Enclosures

Nonstone offers high quality custom enclosures and modification services at competitive price.
For information, please contact your NonStone representative.

- Other finish color and textures
- Cutouts and special holes in body and doors.
- Custom doors
- Custom body
- Special or custom accessoriest

FT Single-Door

NO.	Catalog Number	Dimensions H(mm)	W(mm)	D(mm)
1	FT 202015	200	200	150
2	FT 302015	300	200	150
3	FT 302515	300	250	150
4	FT 302520	300	250	200
5	FT 303015	300	300	150
6	FT 303020	300	300	200
7	FT 304015	300	400	150
8	FT 304020	300	400	200
9	FT 403015	400	300	150
10	FT 403020	400	300	200
11	FT 404020	400	400	200
12	FT 406020	400	600	200
13	FT 406025	400	600	250
14	FT 406030	400	600	300
15	FT 503015	500	300	150
16	FT 503020	500	300	200
17	FT 504015	500	400	150
18	FT 504020	500	400	200
19	FT 504025	500	400	250
20	FT 505020	500	500	200
21	FT 505025	500	500	250
22	FT 507020	500	700	200
23	FT 507025	500	700	250
24	FT 604020	600	400	200
25	FT 604025	600	400	250
26	FT 604030	600	400	300

NO.	Catalog Number	Dimensions H(mm)	W(mm)	D(mm)
27	FT 605020	600	500	200
28	FT 605025	600	500	250
29	FT 606020	600	600	200
30	FT 606025	600	600	250
31	FT 608030	600	800	300
32	FT 705020	700	500	200
33	FT 705025	700	500	250
34	FT 806020	800	600	200
35	FT 806025	800	600	250
36	FT 806030	800	600	300
37	FT 808025	800	800	250
38	FT 808030	800	800	300
39	FT 1006025	1000	600	250
40	FT 1006030	1000	600	300
41	FT 1006040	1000	600	400
42	FT 1008025	1000	800	250
43	FT 1008030	1000	800	300
44	FT 1206030	1200	600	300
45	FT 1206040	1200	600	400
46	FT 1208030	1200	800	300

NO.		H(mm) W(mm) D(mm)
47	SFT	Custom Dimensions

Custom sizes, cut-outs avaliable on request.

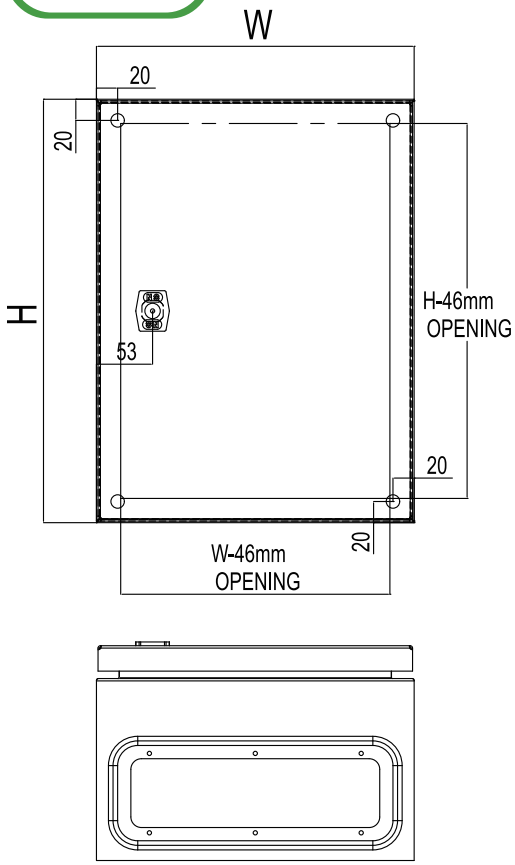

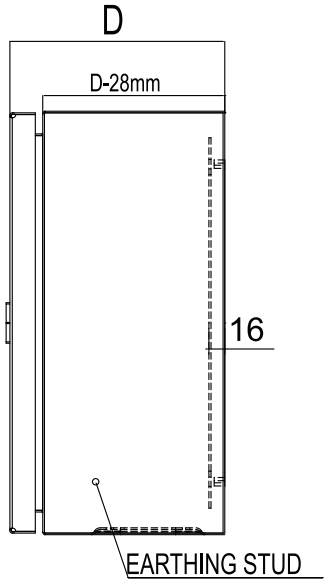

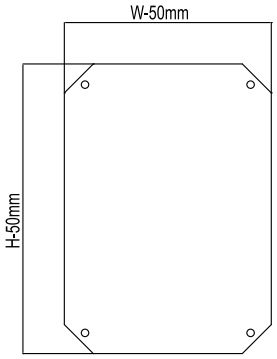

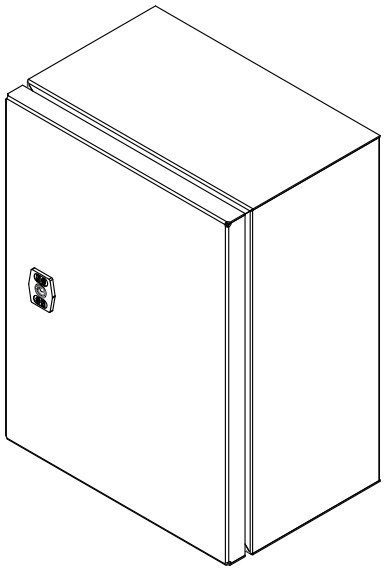

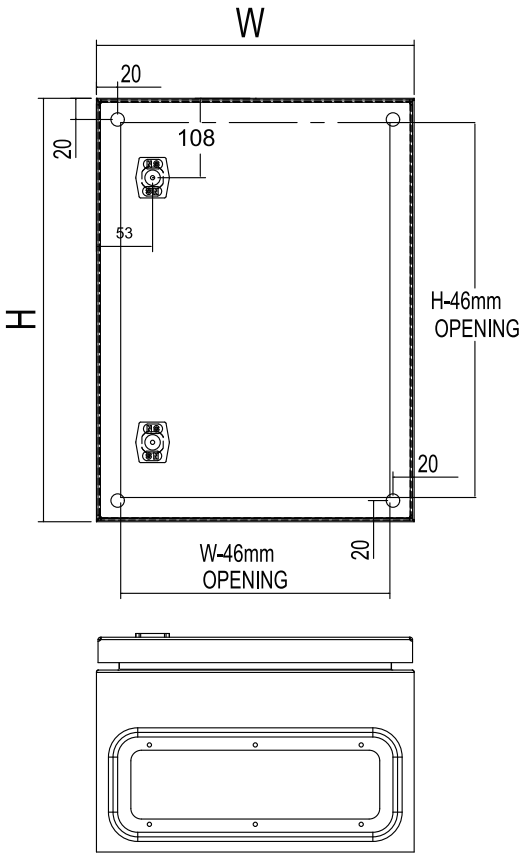

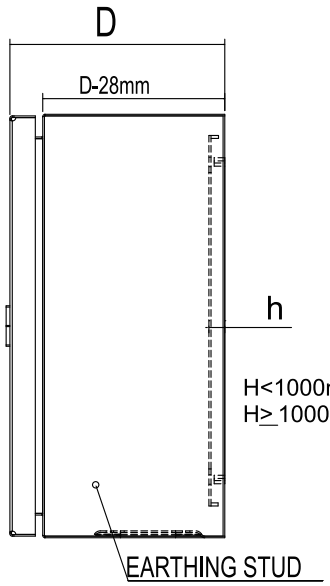

H<1000mm,h=16mm
H≥1000mm,h=26mm

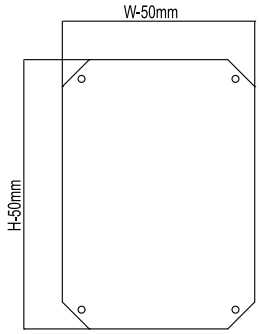

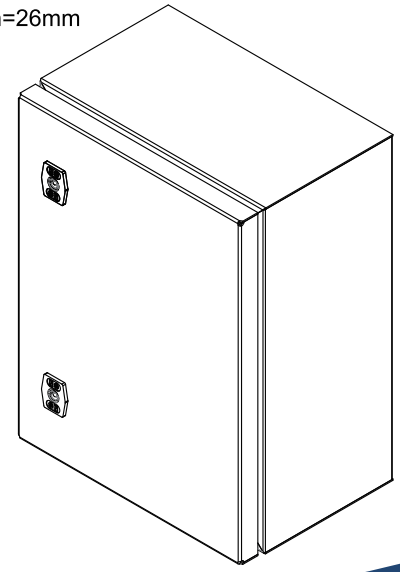

Notes:

TB Series Terminal Box

Screw Cover, CE

Construction

- Cover and body use 1.2mm-1.5mm steel
- Seams continuously welded
- High quality automatic seamless foam-in-place gasket
- Pre-punch opening for wall bracket

Finish

- Cover and body have brushed smooth.

Industry Standards

TB Series

- IP66, IEC 60529
- RoHS Compliant
- CE

SUS304 and SUS316 are available

Custom Enclosures

Nonstone offers high quality custom enclosures and modification services at competitive price. For information, please contact your NonStone representative.

- Other finish color and textures
- Cutouts and special holes in body and doors.
- Custom doors
- Custom body
- Special or custom accessories
- Other custom or modify services

DEPTH 50mm

NO.	Catalog Number		Dimensions H(mm)	W(mm)	D(mm)
1	TB	70705	70	70	50
2	TB	101005	100	100	50
3	TB	161005	160	100	50

DEPTH 80mm

NO.	Catalog Number		Dimensions H(mm)	W(mm)	D(mm)
4	TB	151008	150	100	80
5	TB	151508	150	150	80
6	TB	152008	150	200	80
7	TB	153008	150	300	80
8	TB	202008	200	200	80
9	TB	203008	200	300	80
10	TB	204008	200	400	80
11	TB	206008	200	600	80
12	TB	304008	300	400	80

DEPTH 120mm

NO.	Catalog Number		Dimensions H(mm)	W(mm)	D(mm)
21	TB	124012	120	400	120
22	TB	151512	150	150	120
23	TB	152012	150	200	120
24	TB	153012	150	300	120
25	TB	202012	200	200	120
26	TB	203012	200	300	120
27	TB	204012	200	400	120
28	TB	303012	300	300	120
29	TB	304012	300	400	120
30	TB	404012	400	400	120

DEPTH 125mm

NO.	Catalog Number		Dimensions H(mm)	W(mm)	D(mm)
31	TB	2222125	220	220	125
32	TB	2822125	280	220	125

DEPTH 150mm

NO.	Catalog Number		Dimensions H(mm)	W(mm)	D(mm)
33	TB	282815	280	280	150
34	TB	402815	400	280	150

SPECIAL DIMENSIONS

NO.			H(mm) W(mm) D(mm)
35	STB	Custom Dimensions	

Custom sizes, cut-outs avaliable on request.

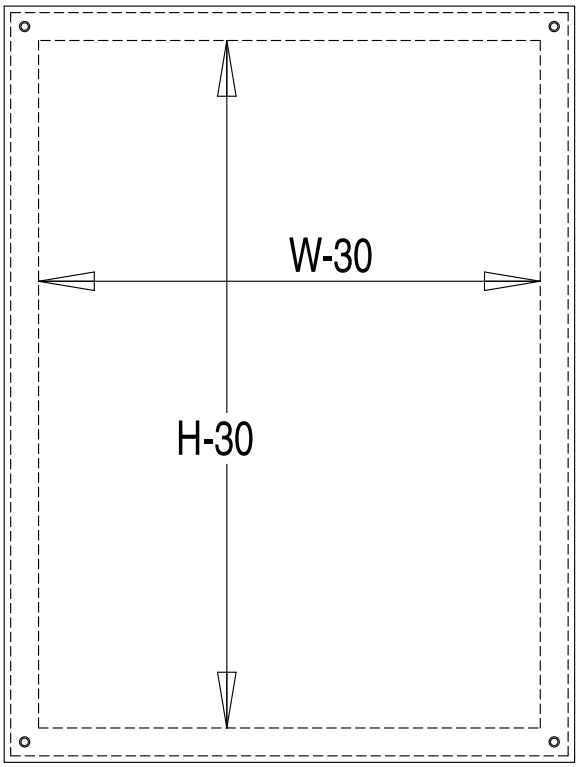
W-30
H-30

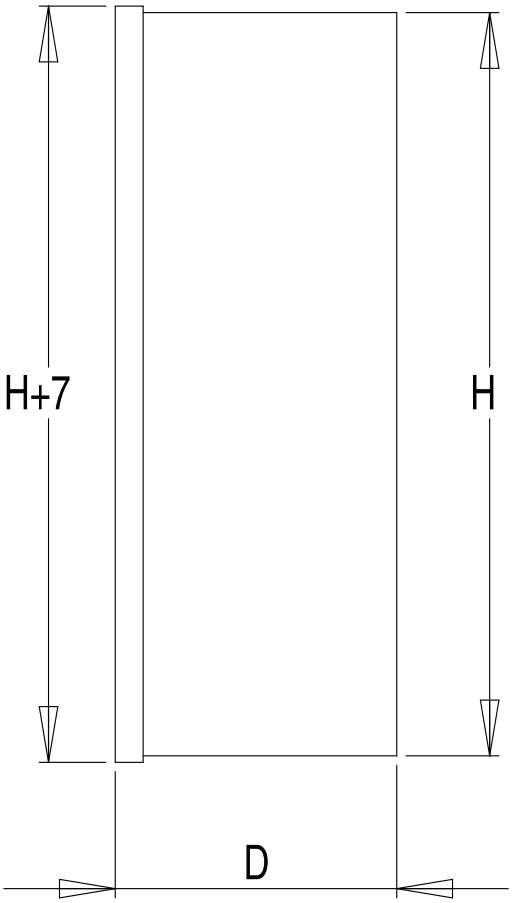
H+7
H
D

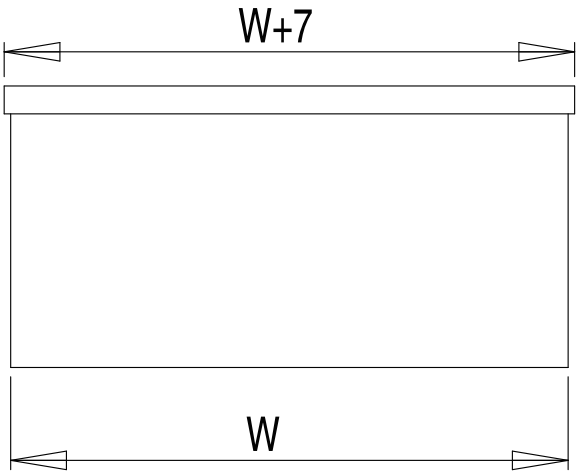
W+7
W

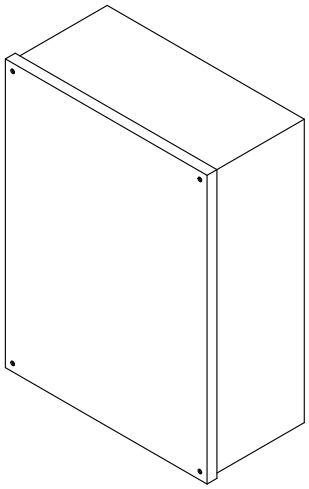

Accessories

Quarter-turn Lock

- IP66 quarter-turn lock with 90° rotation.
- Right hand or left hand application.

RoHS COMPLIANT

NO.	Catalogue Number	Description
1	CS003QT	Quarter-turn Lock

Quarter-turn Lock with wing

- IP66 quarter-turn lock. Wing handle with 90° rotation.
- Right hand or left hand application.

RoHS COMPLIANT

NO.	Catalogue Number	Description
1	CS003QTW	Quarter-turn Lock with wing

Stainless steel quarter-turn Lock

- IP66 stainless steel quarter-turn lock with 90° rotation.
- Right hand or left hand application.

RoHS COMPLIANT

NO.	Catalogue Number	Description
1	CS005Q	Stainless Steel Quarter-turn Lock

NS Key

RoHS COMPLIANT

NO.	Catalogue Number
1	CS003Key

Data subject to change without notice.

Mounting Feet Kits

- Heavy duty mounting feet.
- Vertical or Horizon application.

NO.	Catalogue Number	Description
1	CS001	Mounting Bracket, Mild Steel
2	CS002	Mounting Bracket, Stainless Steel

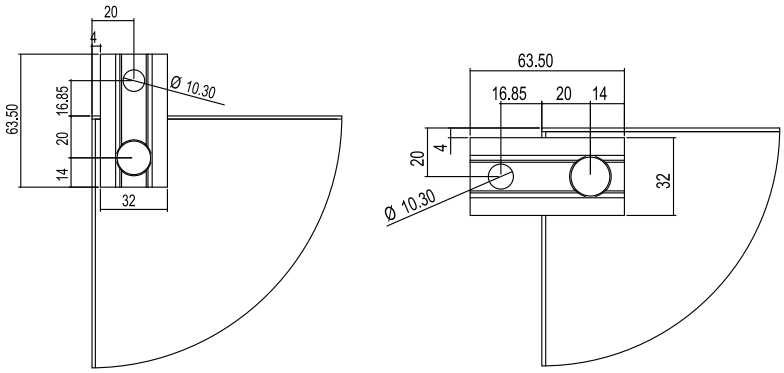

Louver Vent Kits

- Assembing on enclosure surface, allow air exchange with dripping water protection.
- Assembled by 4 screws, easy and fast.

LVP-1515A

NO.	Catalogue Number
1	LVP-1515A

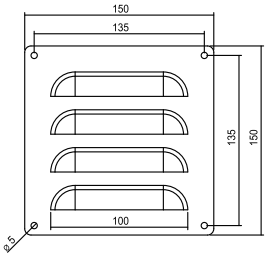

LVP-1515C

NO.	Catalogue Number
1	LVP-1515C

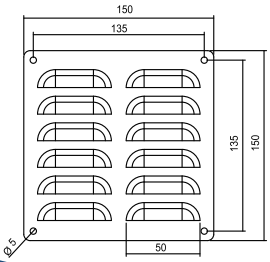

EXM Genuine Clip-on Fan Filter

NO.	Catalogue Number	H(mm)	W(mm)	D(mm)
1	880GP 109	109	109	22
2	880GP 150	150	150	22
3	880GP 325	325	325	22

880GP109

880GP150

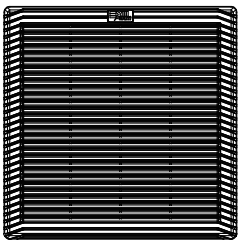

880GP325

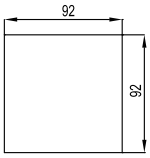

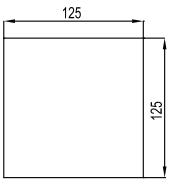

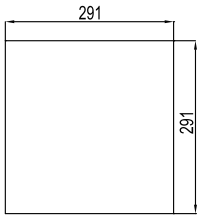

RoHS COMPLIANT UL

Accessories

Data subject to change without notice.

EXM Fan Package

RoHS COMPLIANT

NO.	Catalogue Number	H(mm)	W(mm)	D(mm)	CFM	V
1	880FP 109N08	109	109	50	55	220

* CFM without filter

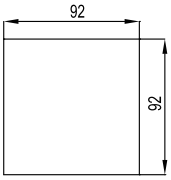

EXM Fan Package

RoHS COMPLIANT

NO.	Catalogue Number	H(mm)	W(mm)	D(mm)	CFM	V
1	880FP 150N12	150	150	60	120	220

* CFM without filter

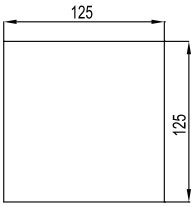

EXM Fan Package

RoHS COMPLIANT

NO.	Catalogue Number	H(mm)	W(mm)	D(mm)	CFM	V
1	880FP 325N17	325	325	75	235	220

* CFM without filter

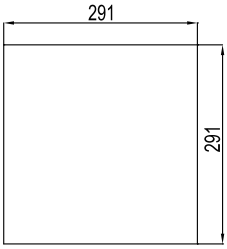

AC FAN

NO.	Catalogue Number	H(mm)	W(mm)	D(mm)	CFM	V
1	N08 22HSL55	80	80	25	55	220
2	N12 22XSL120	119	119	38	120	220
3	N17 22ABSL230	172	150	51	235	220

Screw-on Fan Filter

NO.	Catalogue Number	H(mm)	W(mm)	D(mm)
1	N08 GP	158	158	30
2	N12 GP	208	208	30

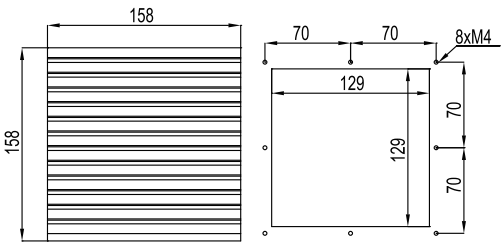

N08GP

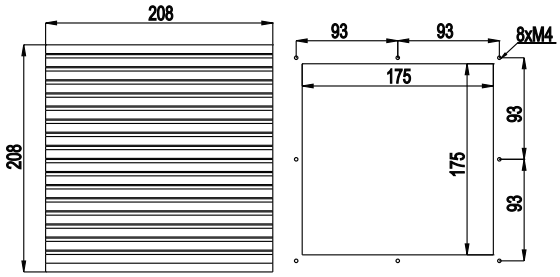

N12GP

Accessories

Data subject to change without notice.

IP Code (International Standard IEC 60529)

First Number	Degree of Protection	Second Number	Degree of Protection
0	No protection	0	No protection
1	Protected against solid foreign objects of 50 mm diameter and greater	1	Dripping water (vertically falling drops) shall have no harmful effect.
2	Protected against solid foreign objects of 12,5 mm diameter and greater	2	Vertically dripping water shall have no harmful effect when the enclosure is tilted at an angle up to 15° from its normal position.
3	Protected against solid foreign objects of 2,5 mm diameter and greater	3	Water falling as a spray at any angle up to 60° from the vertical shall have no harmful effect.
4	Protected against solid foreign objects of 1,0 mm diameter and greater	4	Water splashing against the enclosure from any direction shall have no harmful effect.
5	Ingress of dust is not entirely prevented, but it must not enter in sufficient quantity to interfere with the satisfactory operation of the equipment	5	Water projected by a nozzle against enclosure from any direction shall have no harmful effects
6	Dust tight; No ingress of dust	6	Water projected in powerful jets against the enclosure from any direction shall have no harmful effects

NEMA Non-Hazardous Location Enclosure Standards.

Type 4 Enclosures constructed for either indoor or outdoor use to provide a degree of protection to personnel against access to hazardous parts; to provide a degree of protection of the equipment inside the enclosure against ingress of solid foreign objects (falling dirt and windblown dust); to provide a degree of protection with respect to harmful effects on the equipment due to the ingress of water (rain, sleet, snow, splashing water, and hose directed water); and that will be undamaged by the external formation of ice on the enclosure.

Type 4X Enclosures constructed for either indoor or outdoor use to provide a degree of protection to personnel against access to hazardous parts; to provide a degree of protection of the equipment inside the enclosure against ingress of solid foreign objects (windblown dust); to provide a degree of protection with respect to harmful effects on the equipment due to the ingress of water (rain, sleet, snow, splashing water, and hose directed water); that provides an additional level of protection against corrosion; and that will be undamaged by the external formation of ice on the enclosure.

Type 12 Enclosures constructed (without knockouts) for indoor use to provide a degree of protection to personnel against access to hazardous parts; to provide a degree of protection of the equipment inside the enclosure against ingress of solid foreign objects (falling dirt and circulating dust, lint, fibers, and flyings); and to provide a degree of protection with respect to harmful effects on the equipment due to the ingress of water (dripping and light splashing).

For further information please contact us at 886-6-5782799 or visit our website at www.nonstone.com.tw.

Notes:

How to have my

electrical/electronic equipments

work better in industrial environments?

WE CAN HELP.

IP66 NS, NSS series enclosures can protect water and dust getting inside the enclosures.
When your electrical/electronic equipments assembled inside our enclosures, it is extended the working life of the equipments and reduce your maintenance costs.
For more information, please contact sales representatives.

www.nonstone.com.tw

Made in TAIWAN NS *Building Tommorrow, Together.*

The New TB Series TERMINAL BOX

IP66

Available in 304 & 316

Custom sizes, cut-outs avaliable on request.

NS NONSTONE

WE WORK WITH CUSTOMERS

NS

NONSTONE